Broîl Kîng®

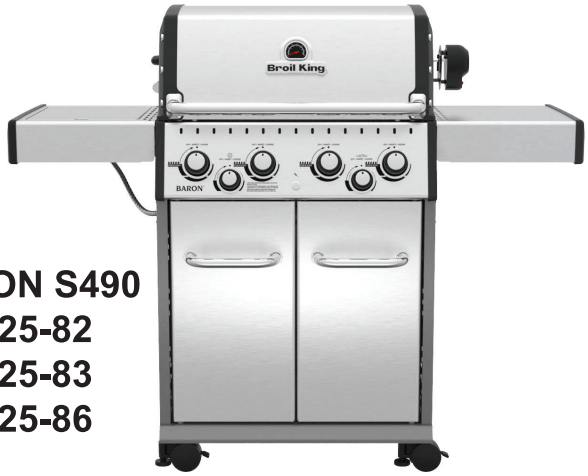

BARON S490
9225-82
9225-83
9225-86

BARON 490
9229-82
9229-83
9229-86

BARON S440
9225-62
9225-63
9225-66

BARON 440
9229-62
9229-63
9229-66

BARON S420
9225-52
9225-53
9225-56

BARON 420
9229-52
9229-53
9229-56

Onward Manufacturing Company
Since 1906
1000 East Market Street
Huntington, Indiana, 46750, USA

50084-S48EU Rev A 03/17

HARDWARE INCLUDED

Y-12865	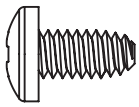	x18	Y-12310	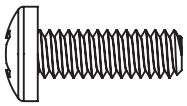	x16
S21125		x8	Y-29304	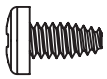	x2
S21235	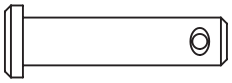	x2	S21233	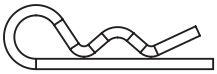	x2
Y-12857	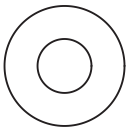	x4	Y-11551	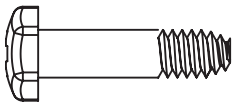	x2
Y-12124	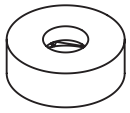	x2	S35094	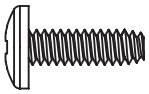	x1
20005-000	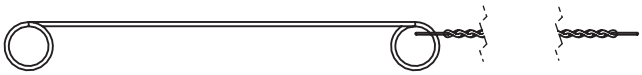	x1	Y-11795		x4

9229-82,83,86 / 9225-82,83,86

S35095		x2	S21061	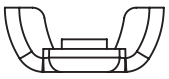	x2

TOOLS REQUIRED

Y-31223

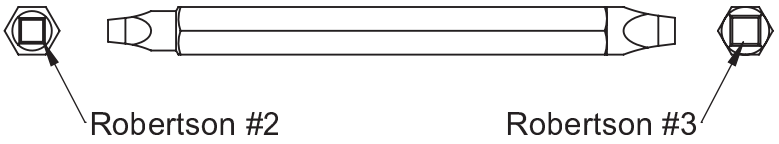

7/16"

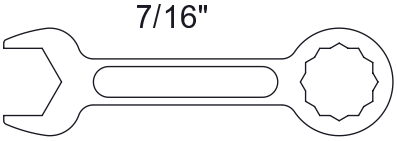

1	(8) 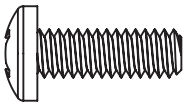

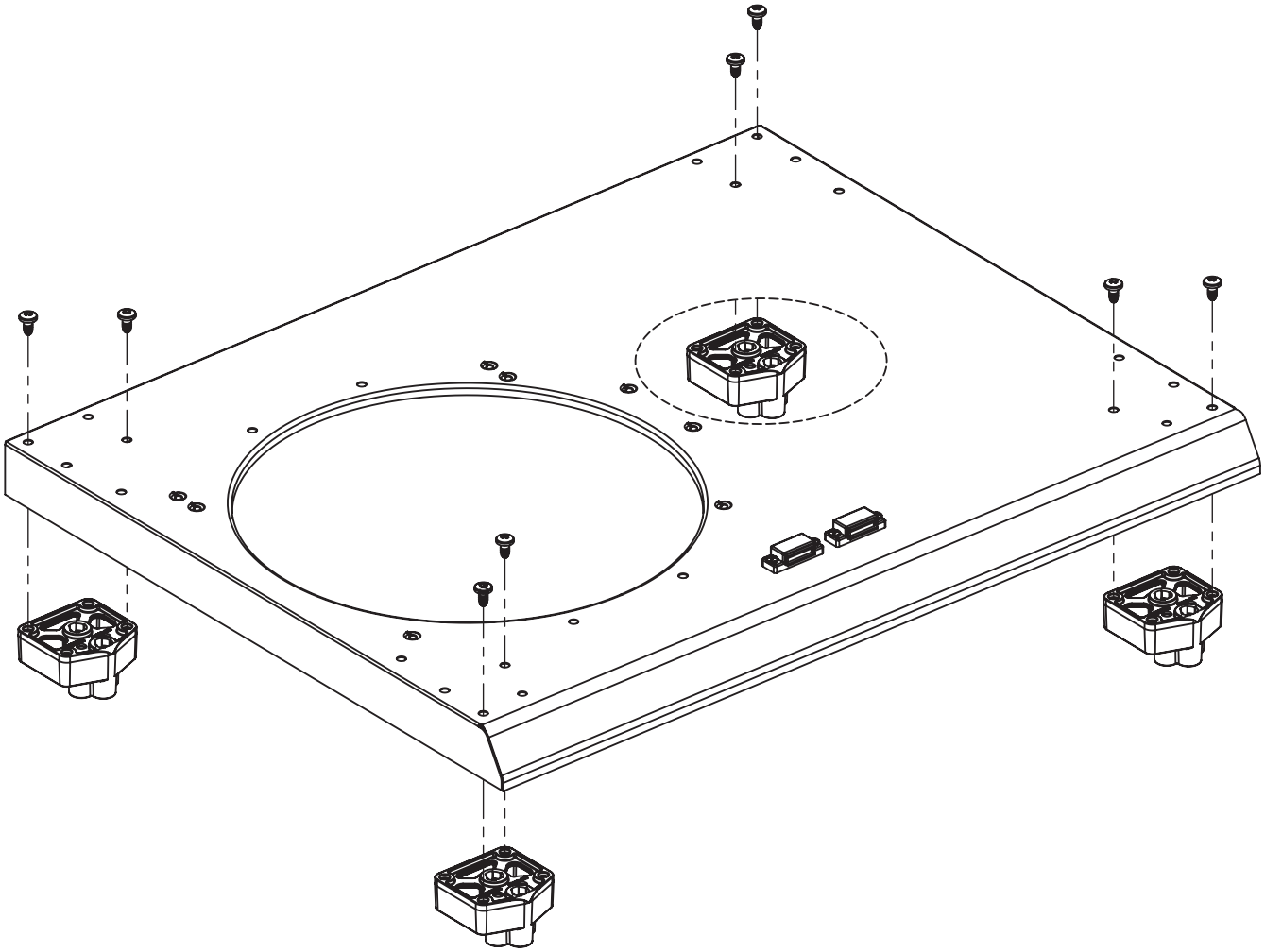

2	

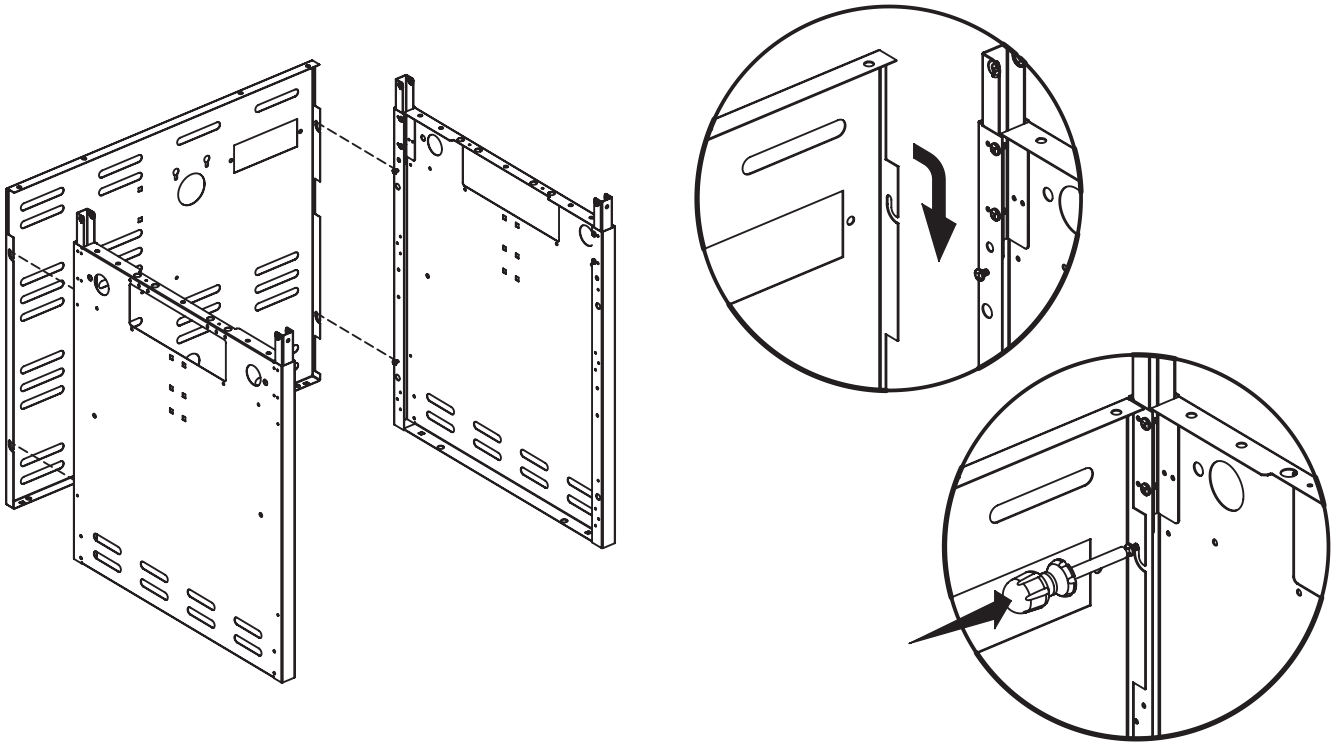

3	(6) 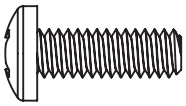

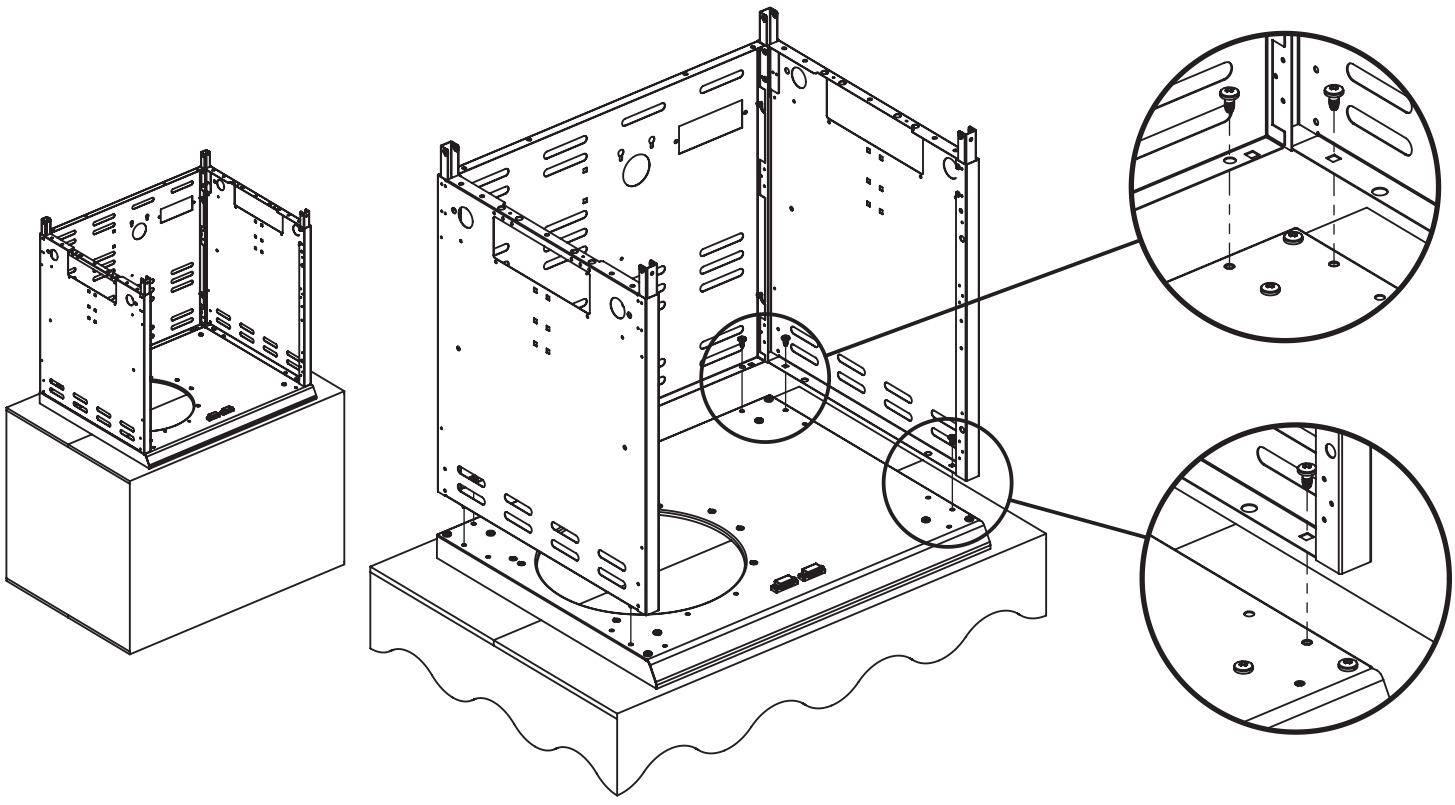

4	(4) 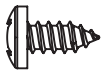

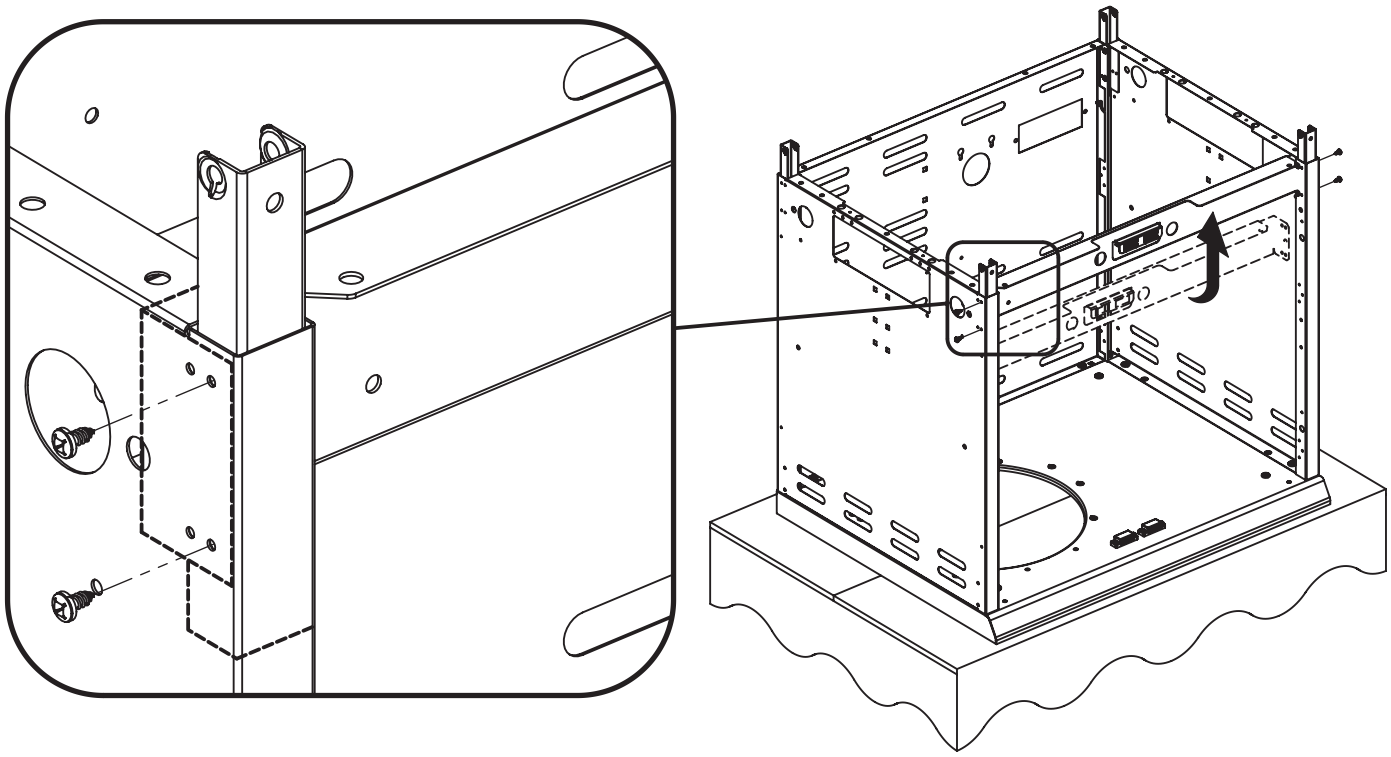

5	(4) 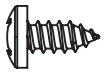 (1)

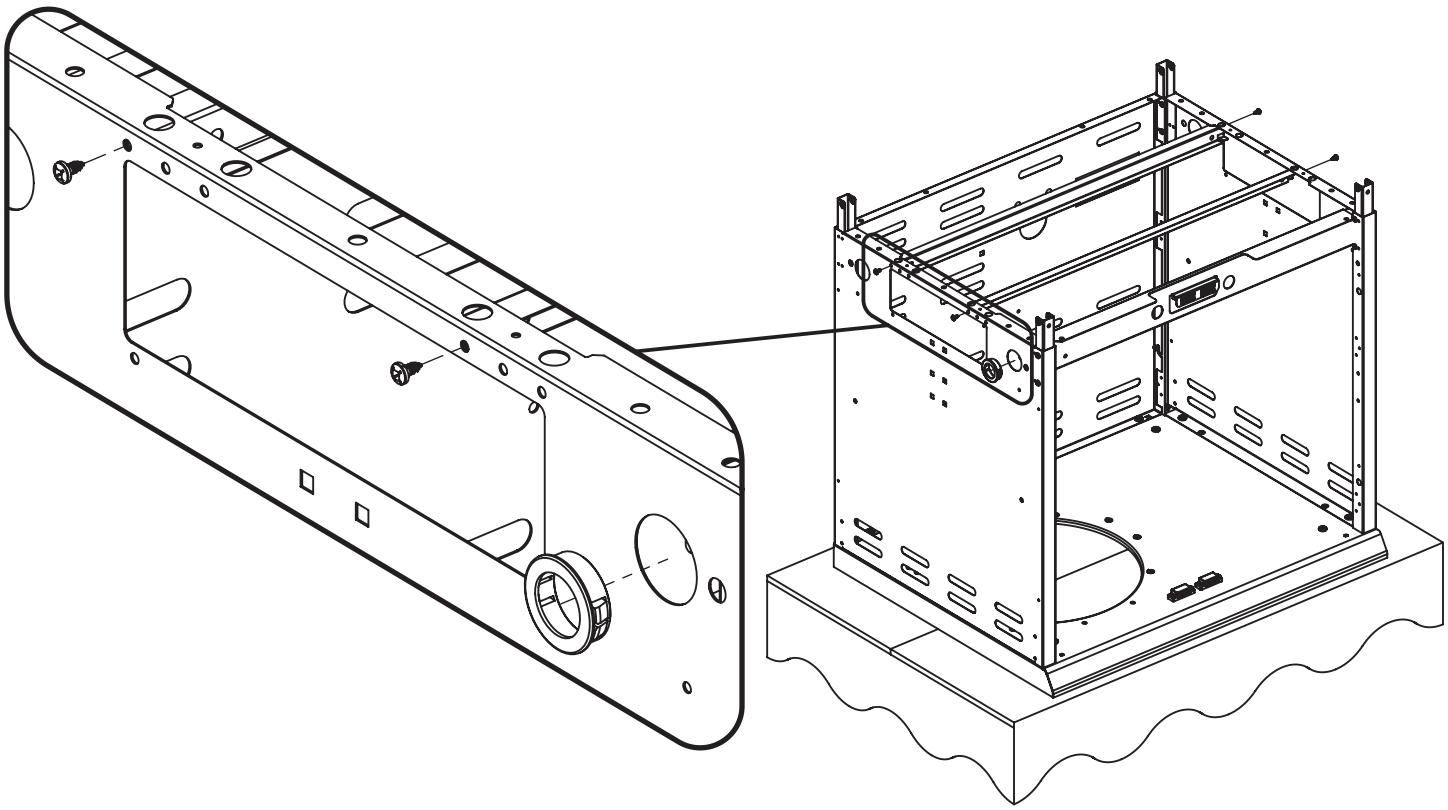

6	(4) 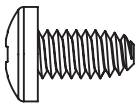

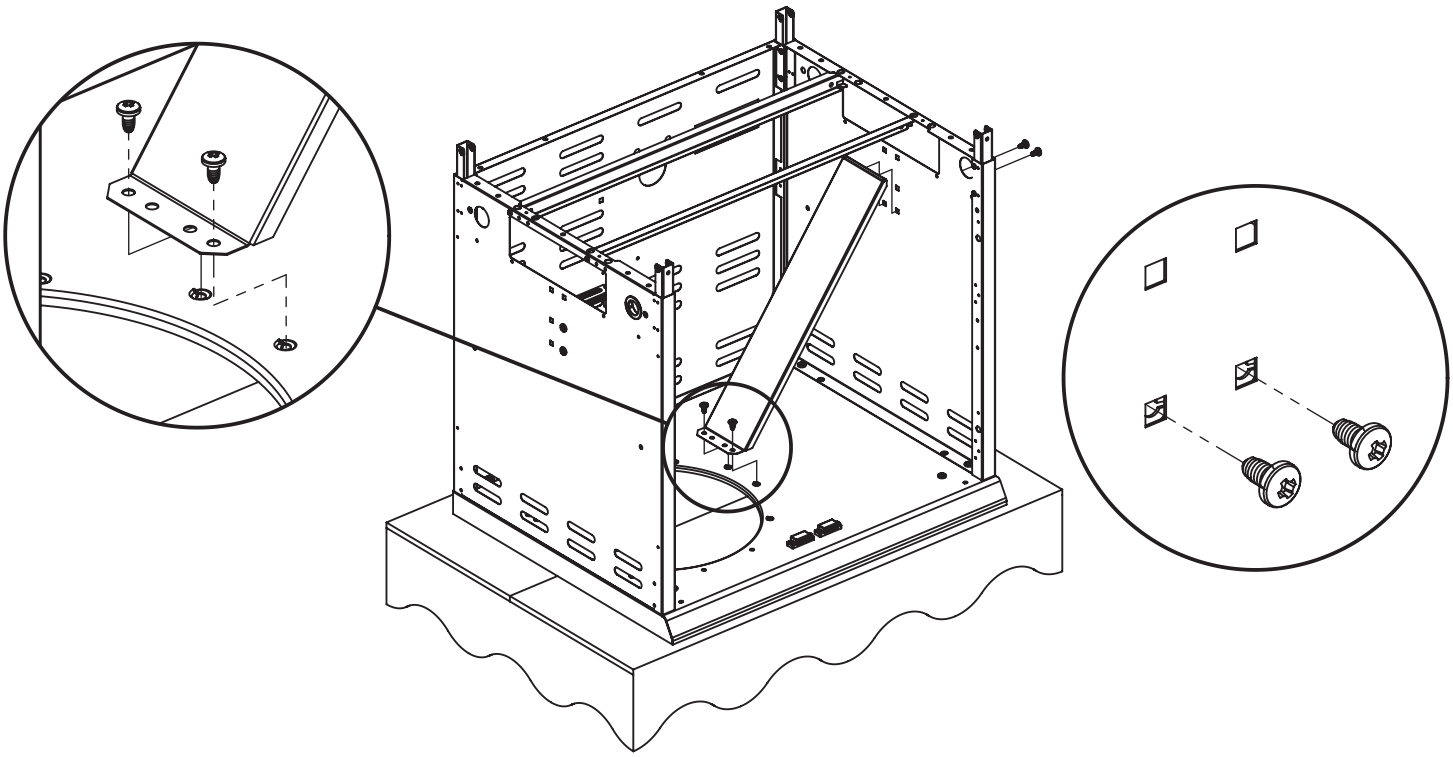

7	

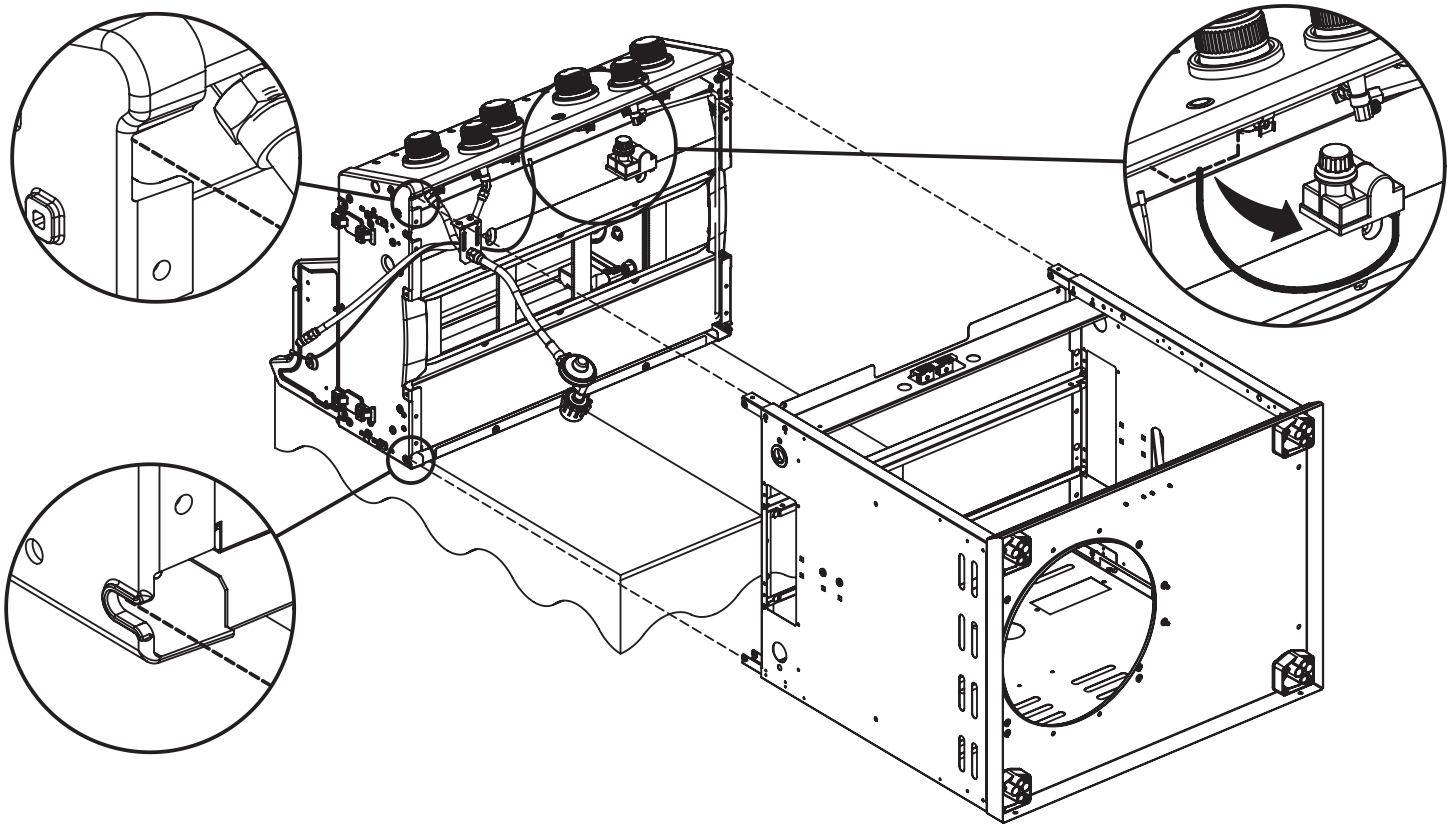

8	(6) 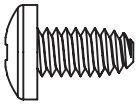

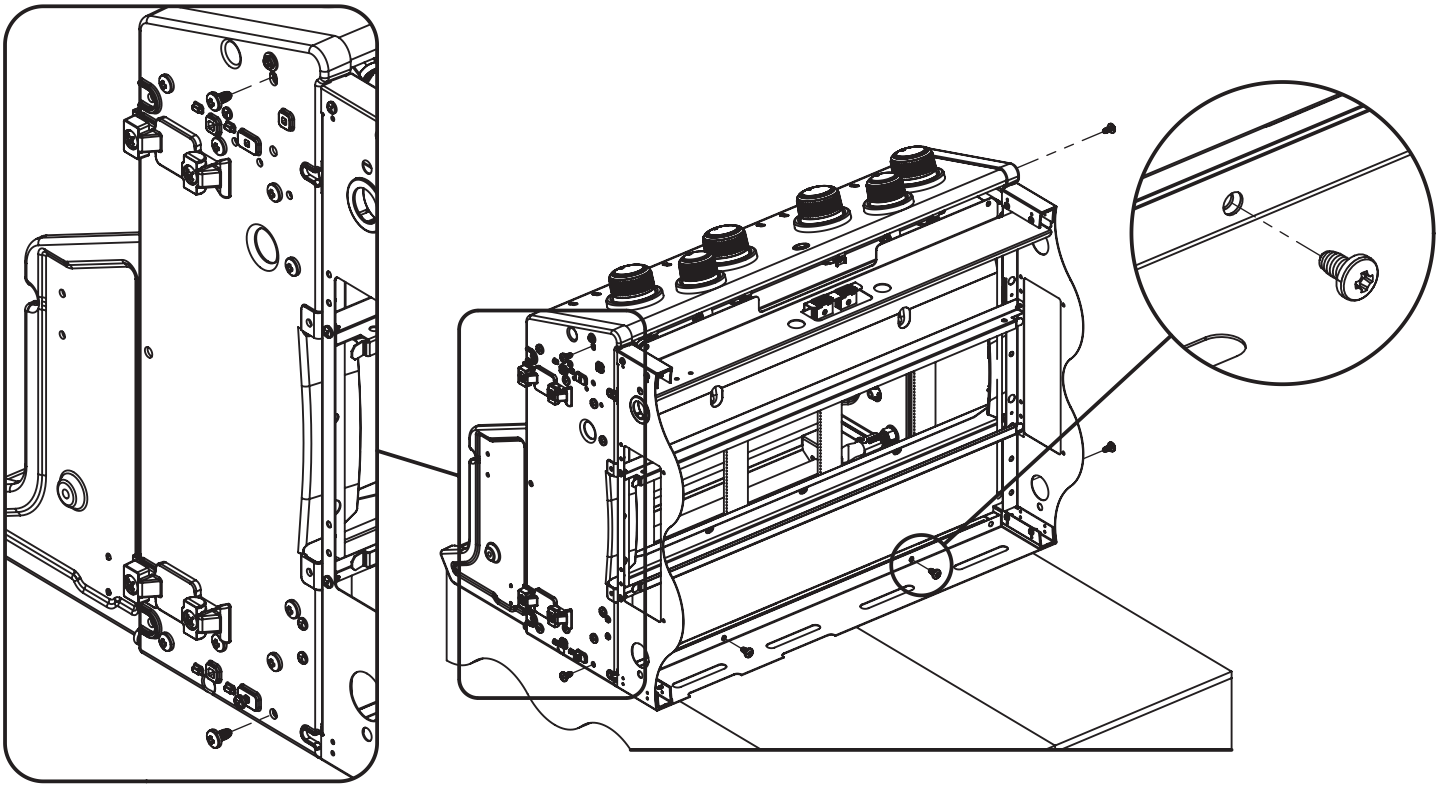

9	(2) 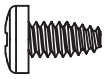

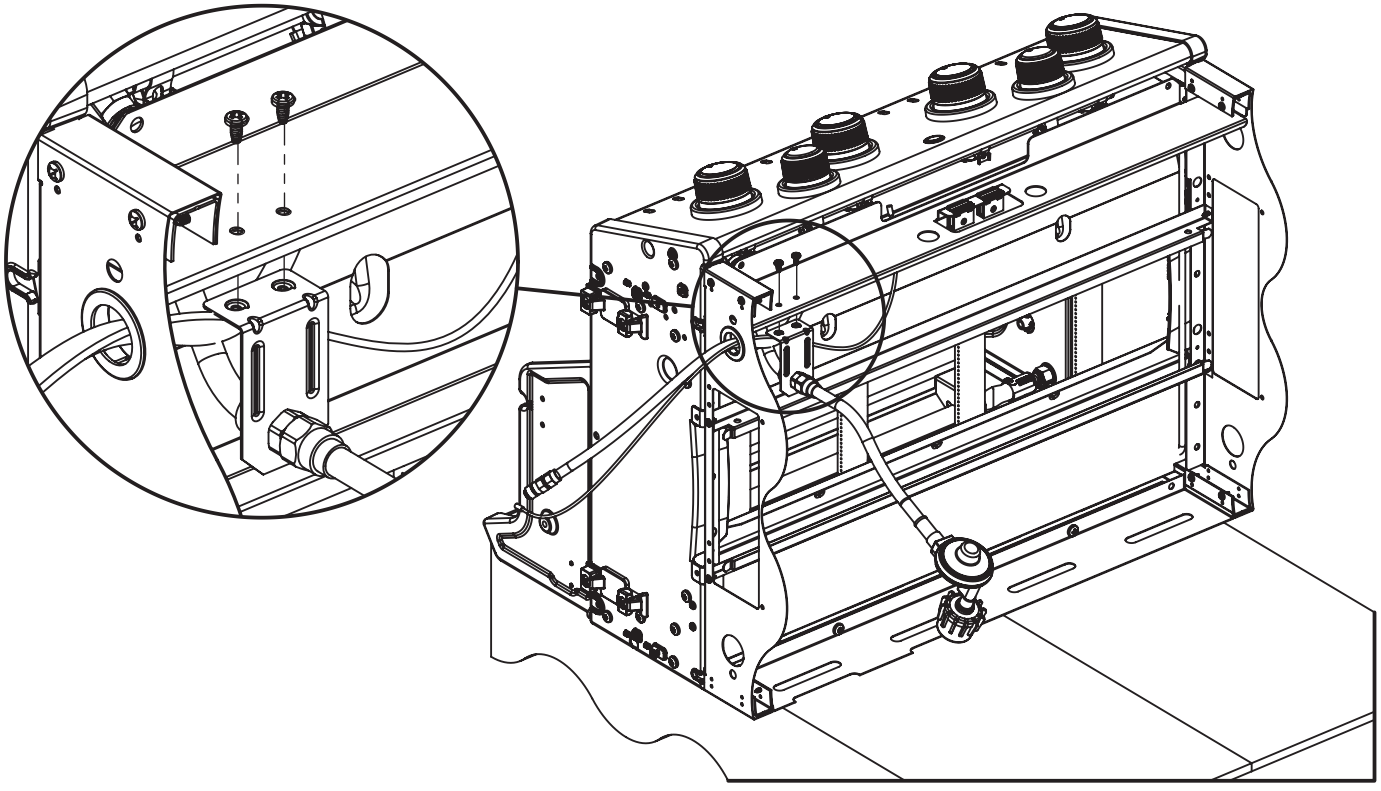

10

(1)

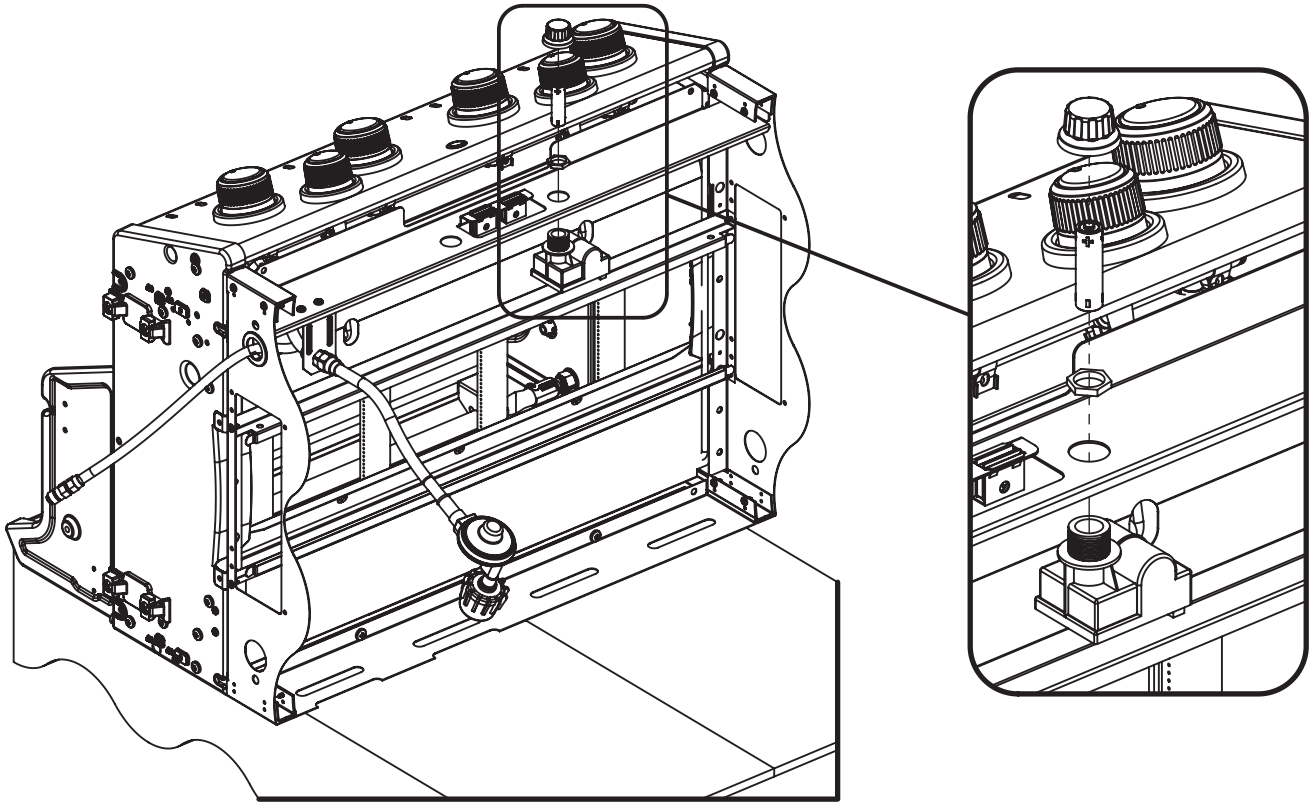

11

(4) (4)

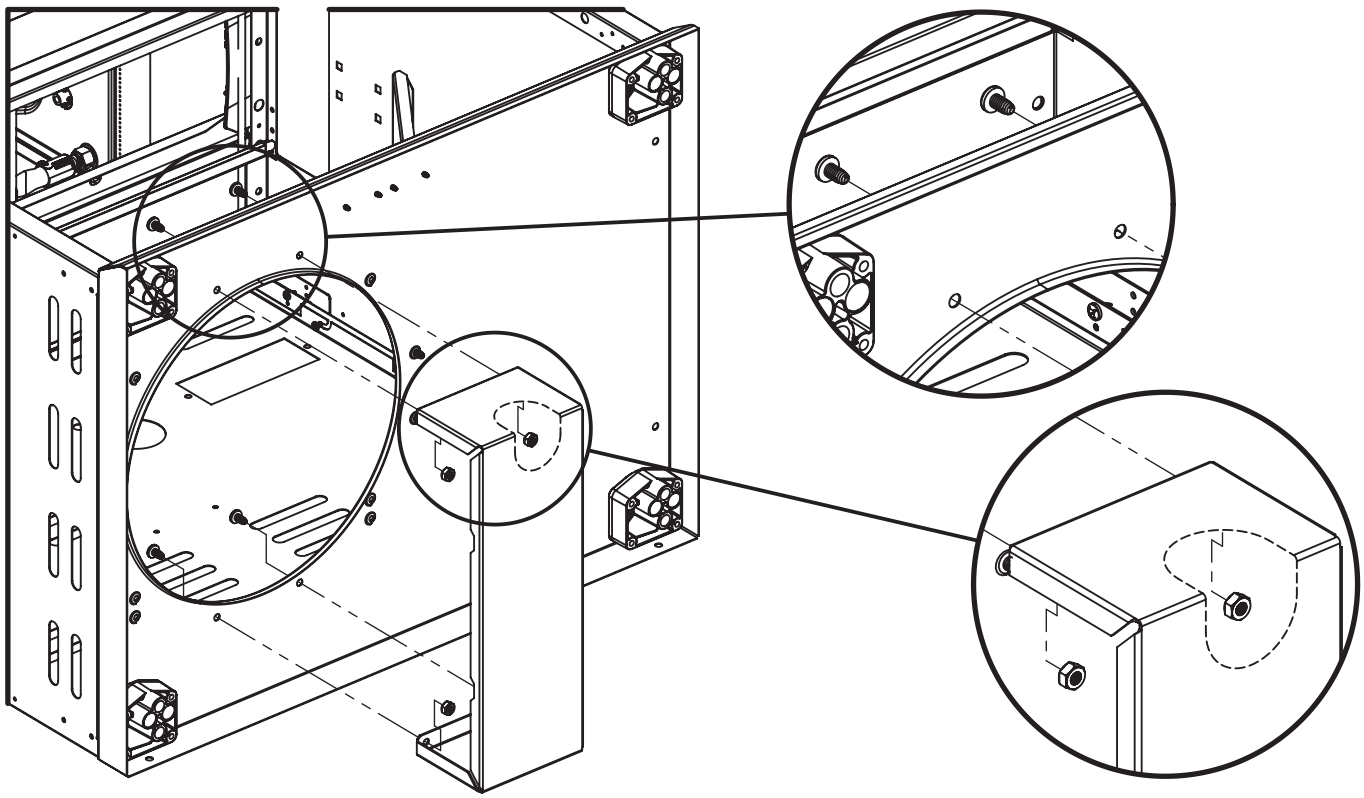

12	(4)

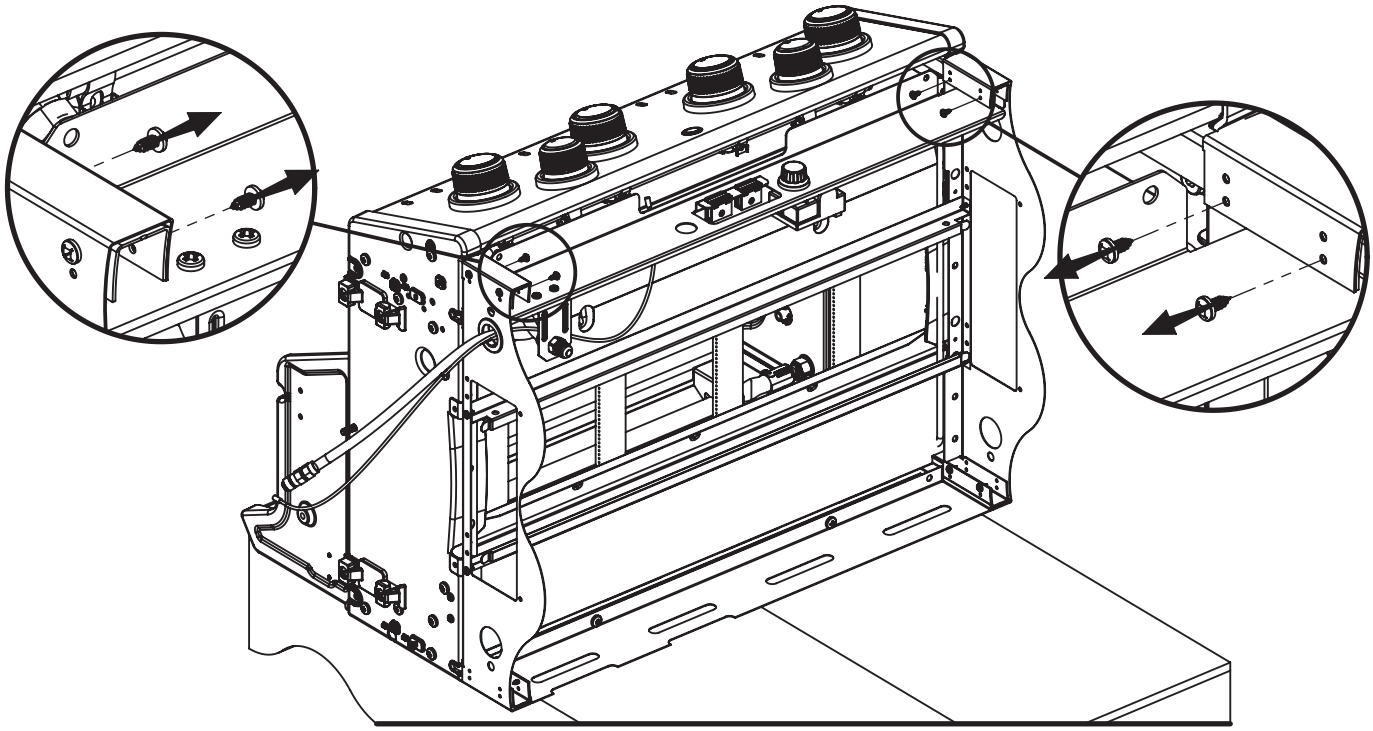

13	(4) 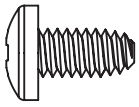 (4) 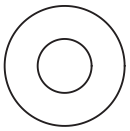

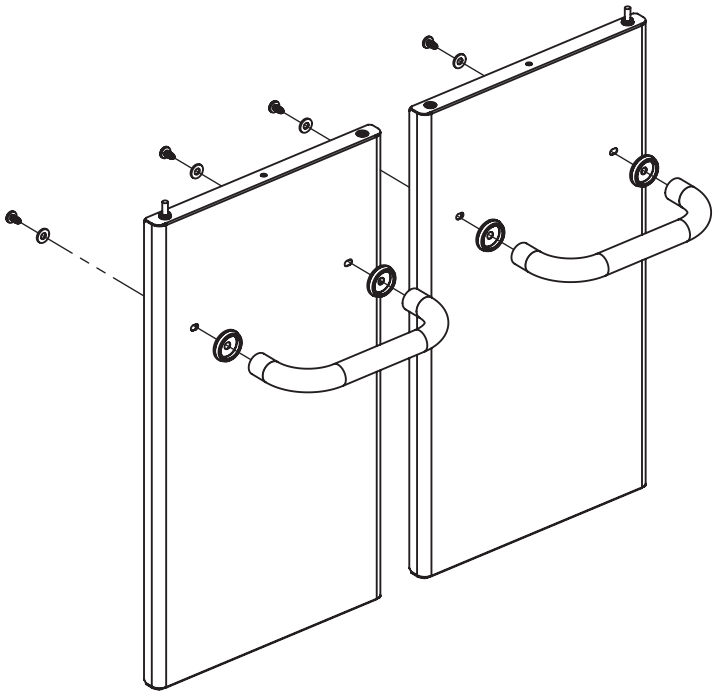

14	(2) 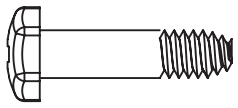 (2) 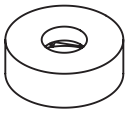

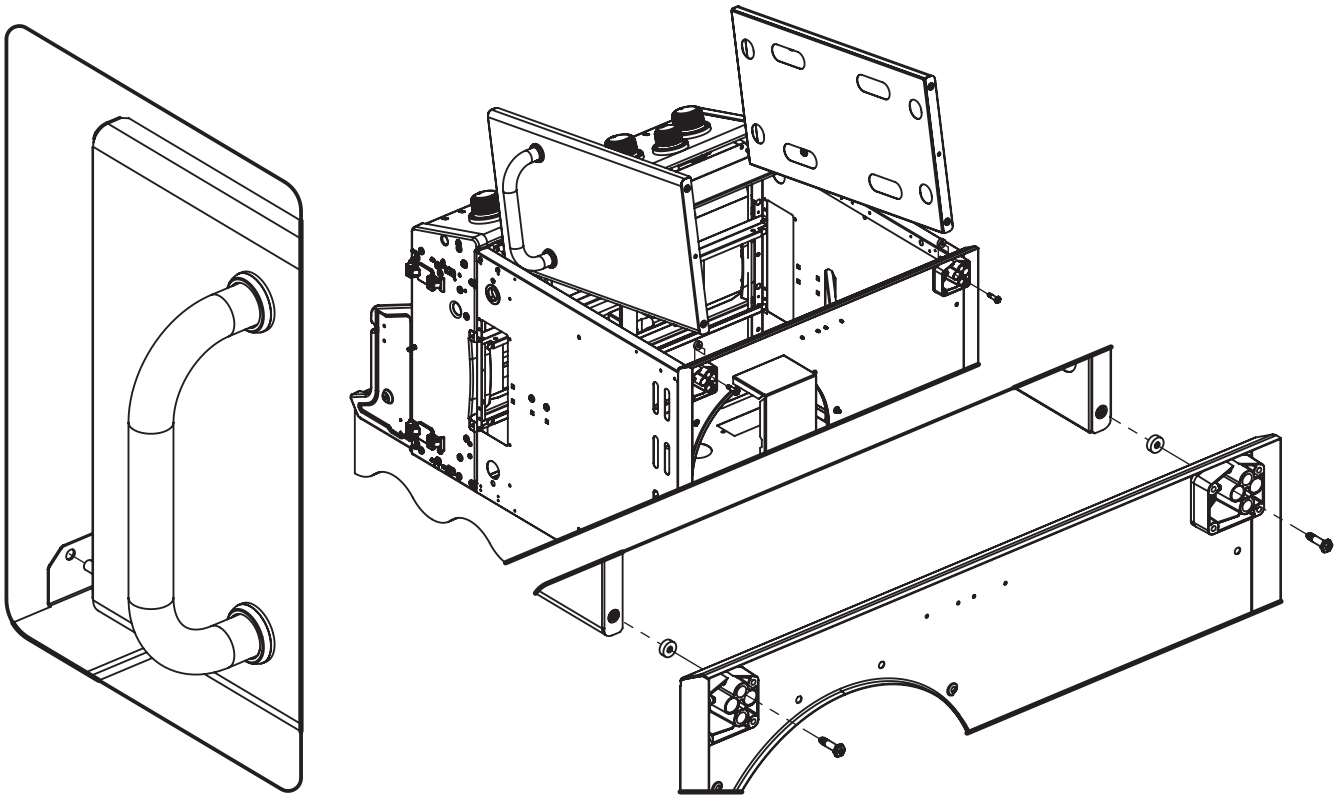

15	

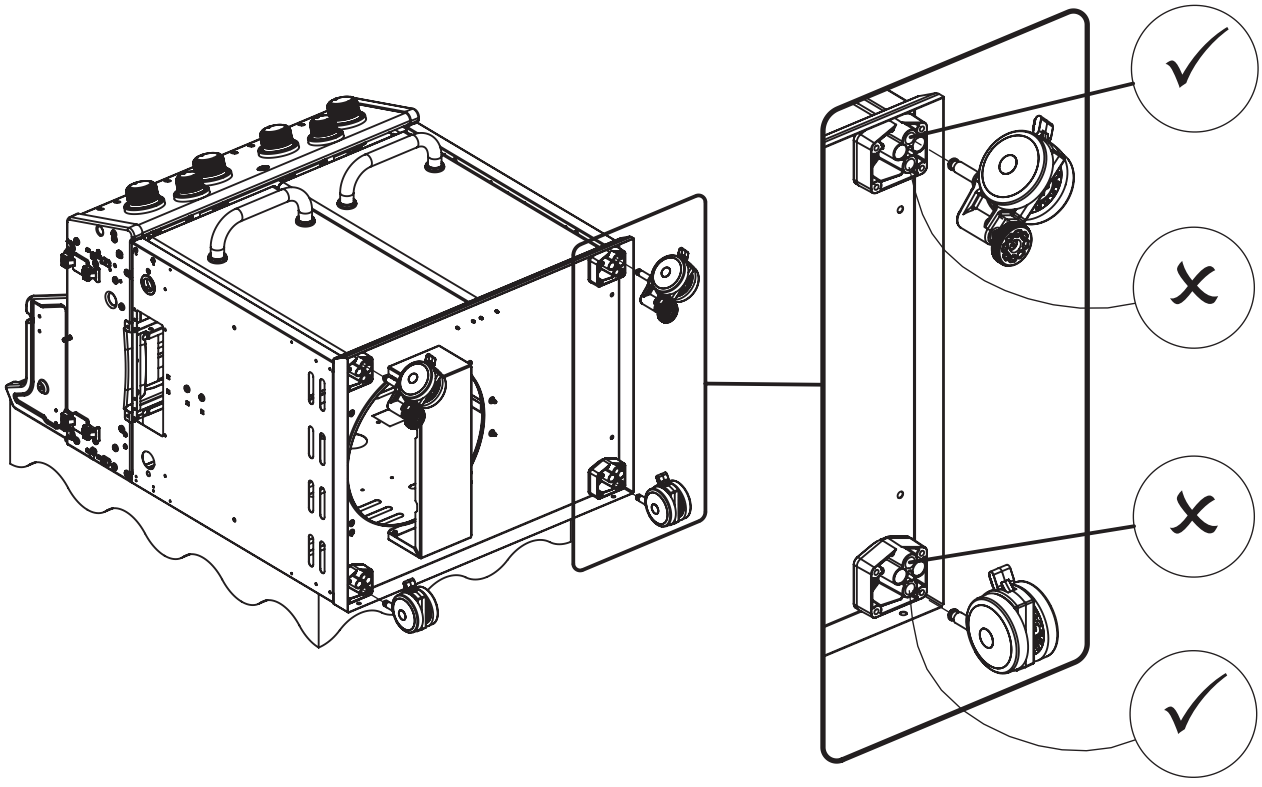

16	

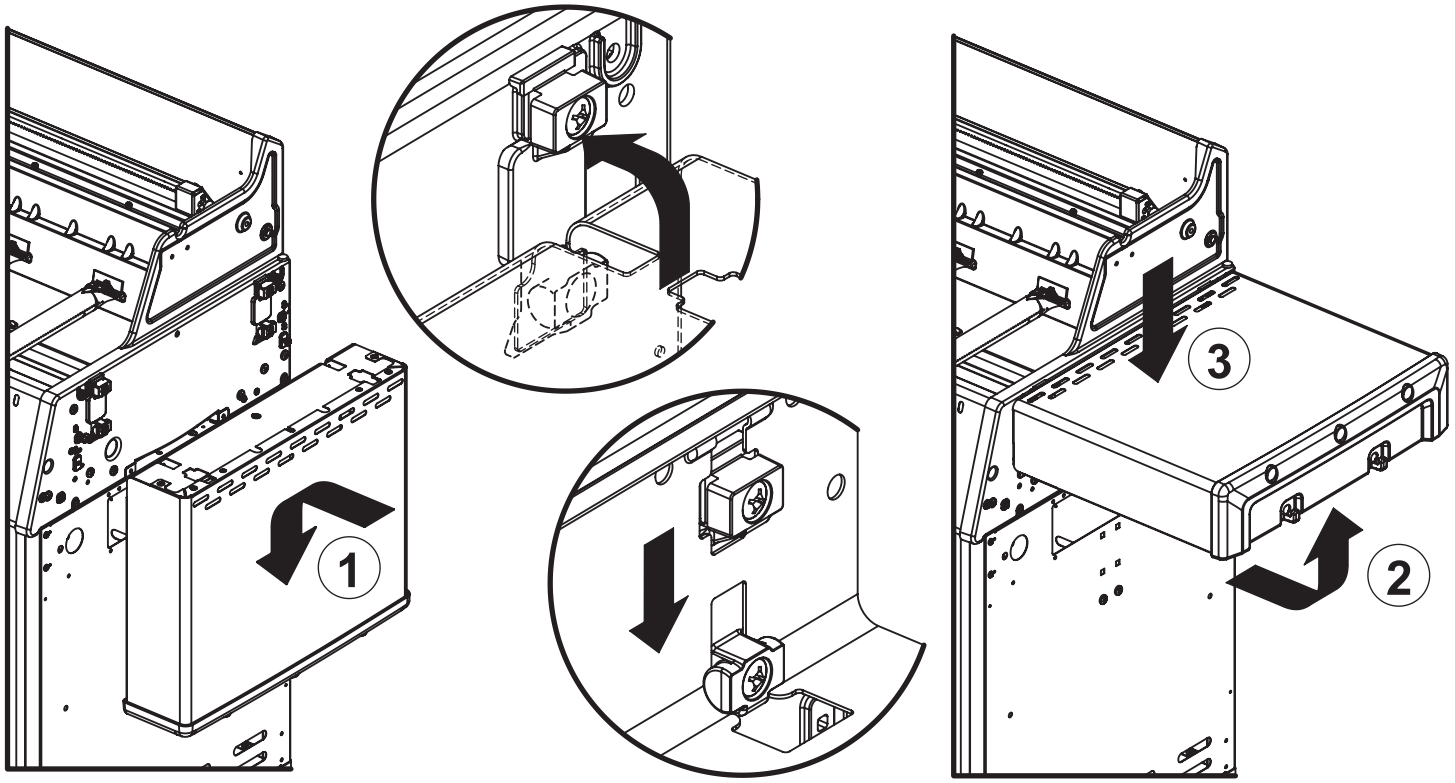

17	

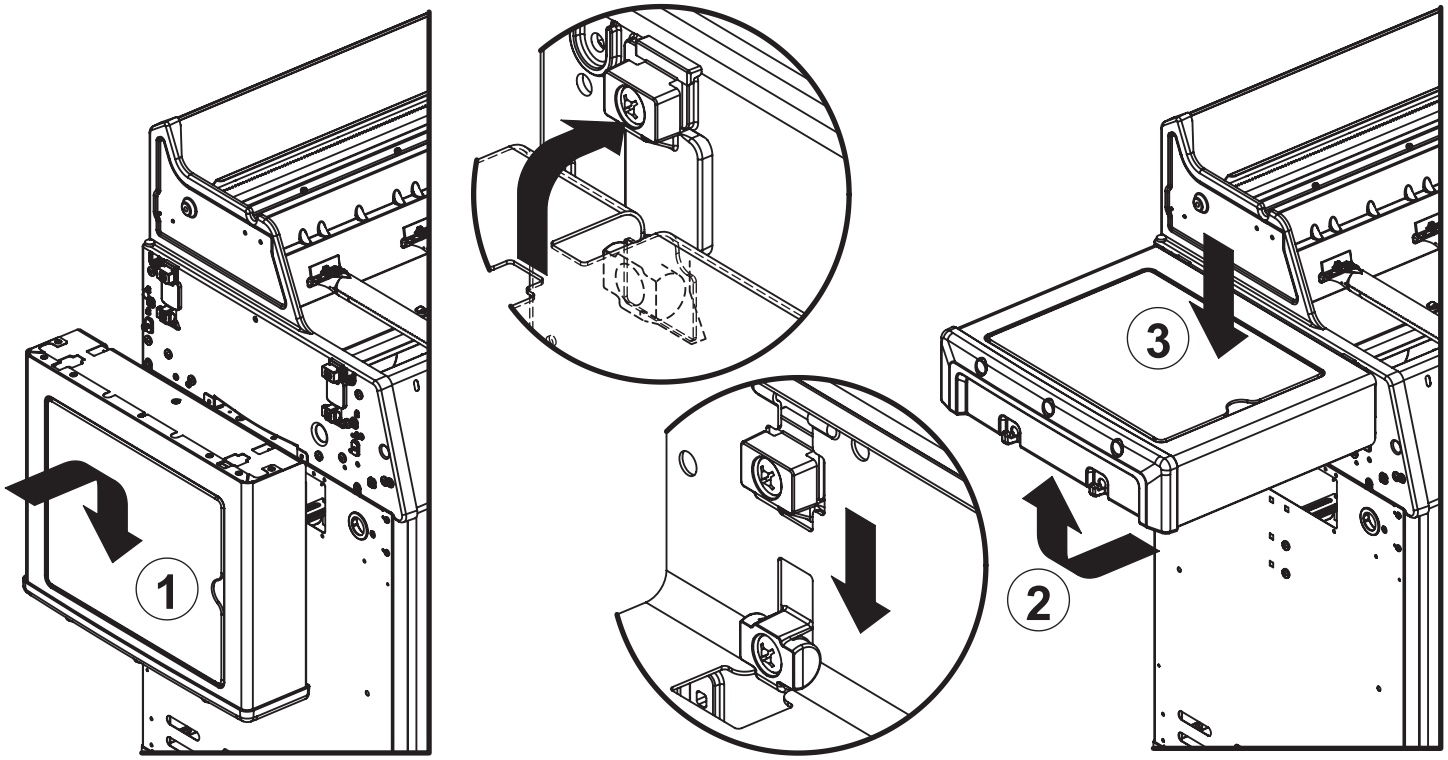

18 (2) 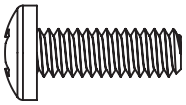

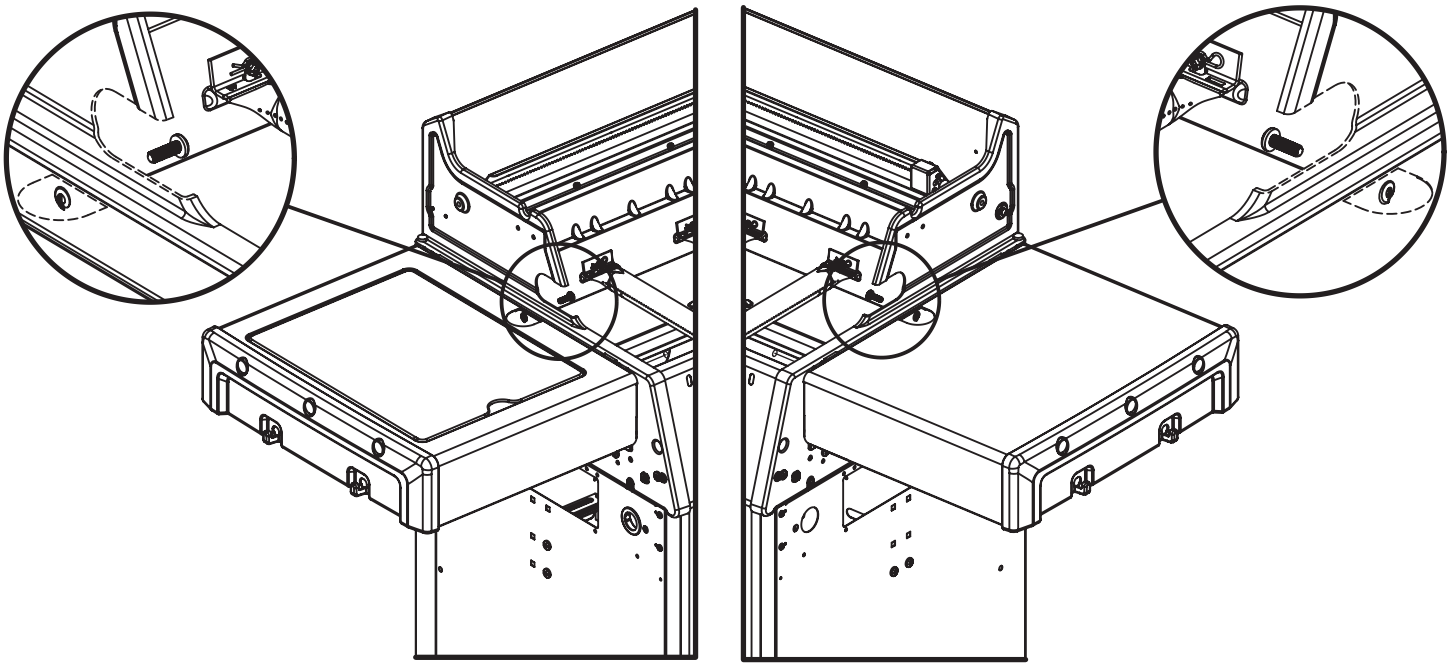

19 (1) 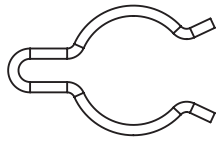

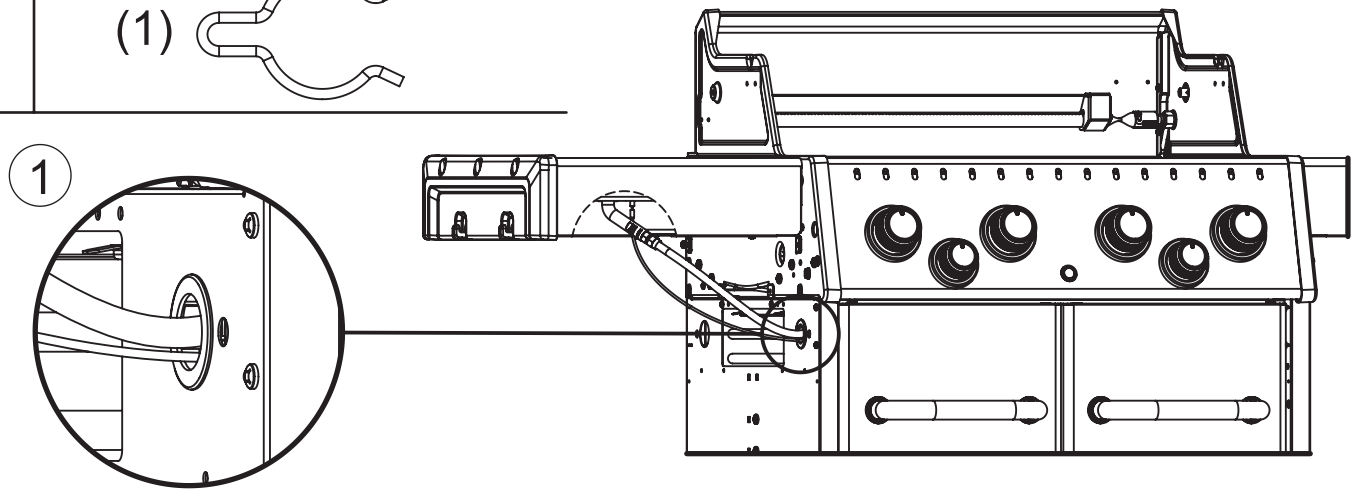

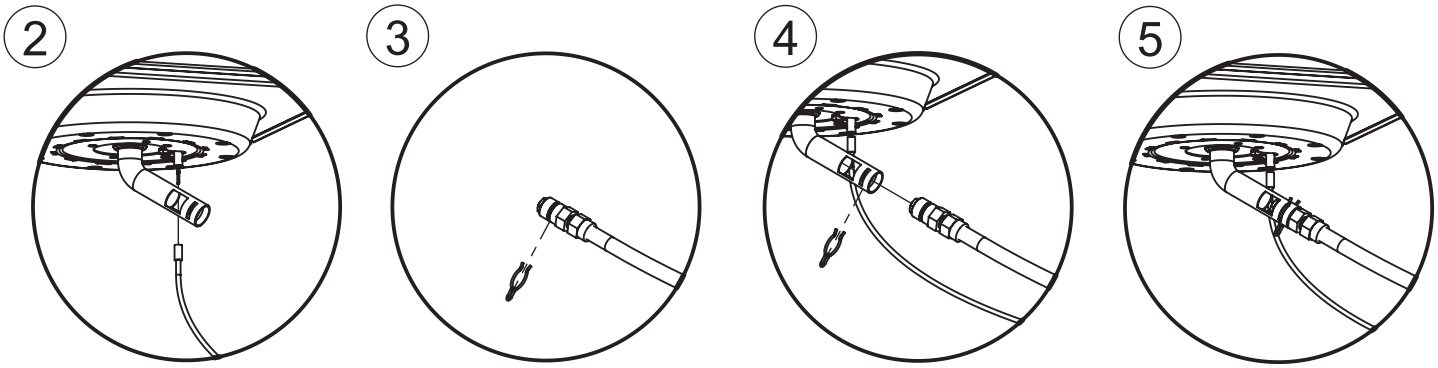

20

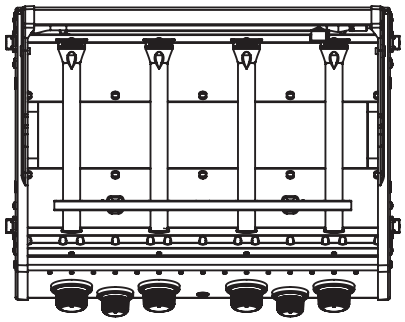

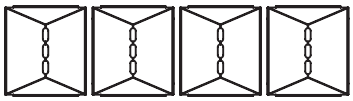

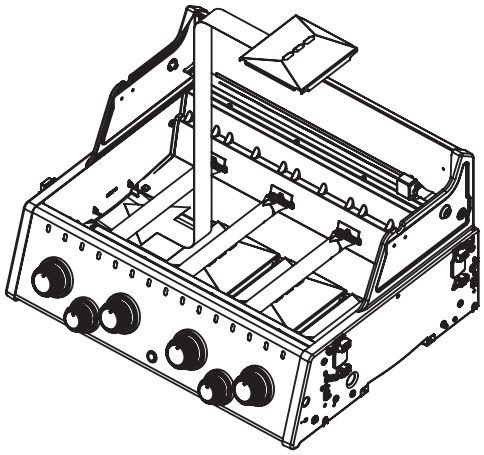

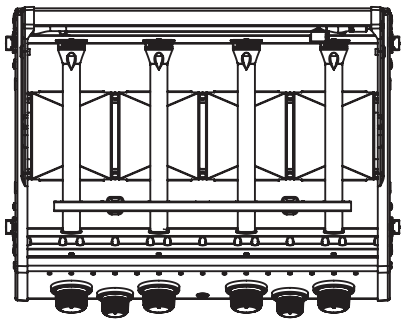

21

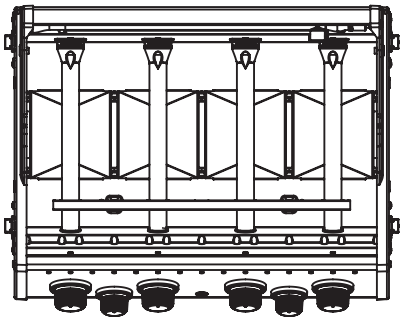

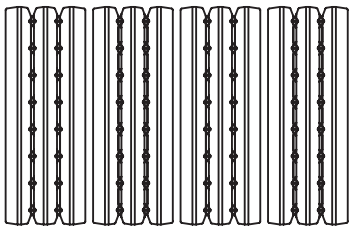

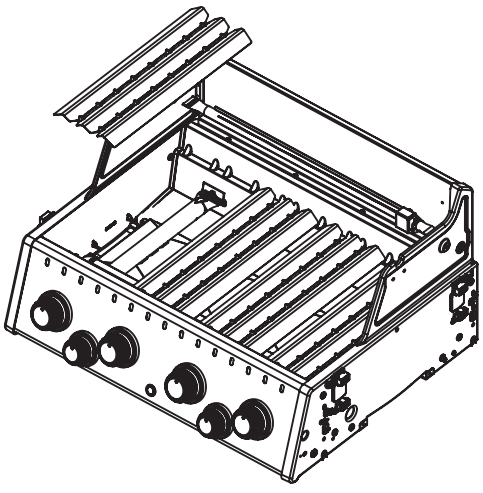

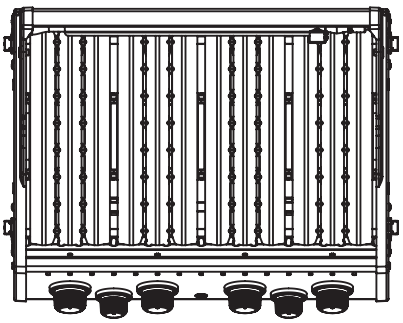

22	(2) 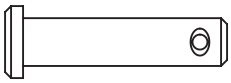 (2) 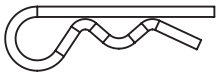

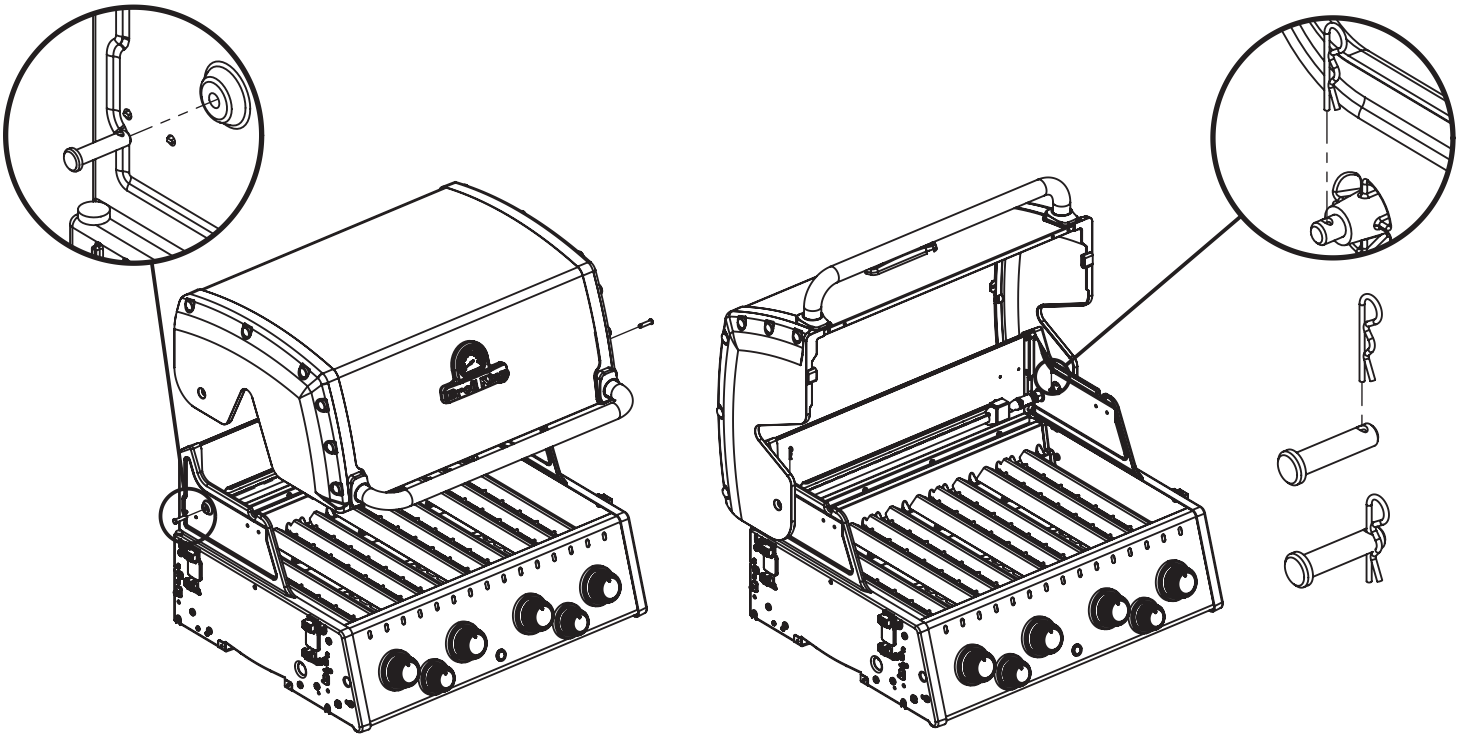

23	

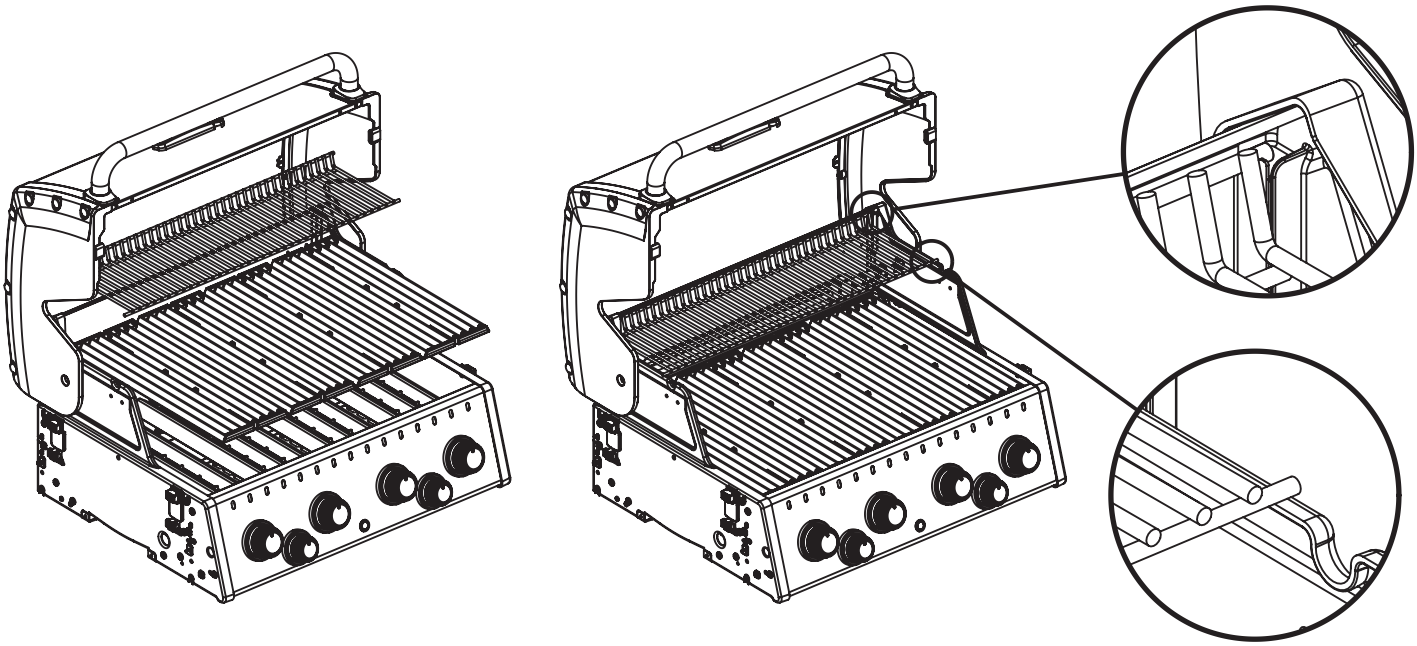

24	(1) 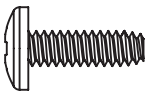 (1) 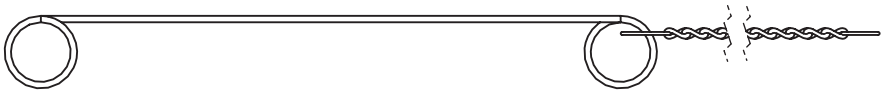

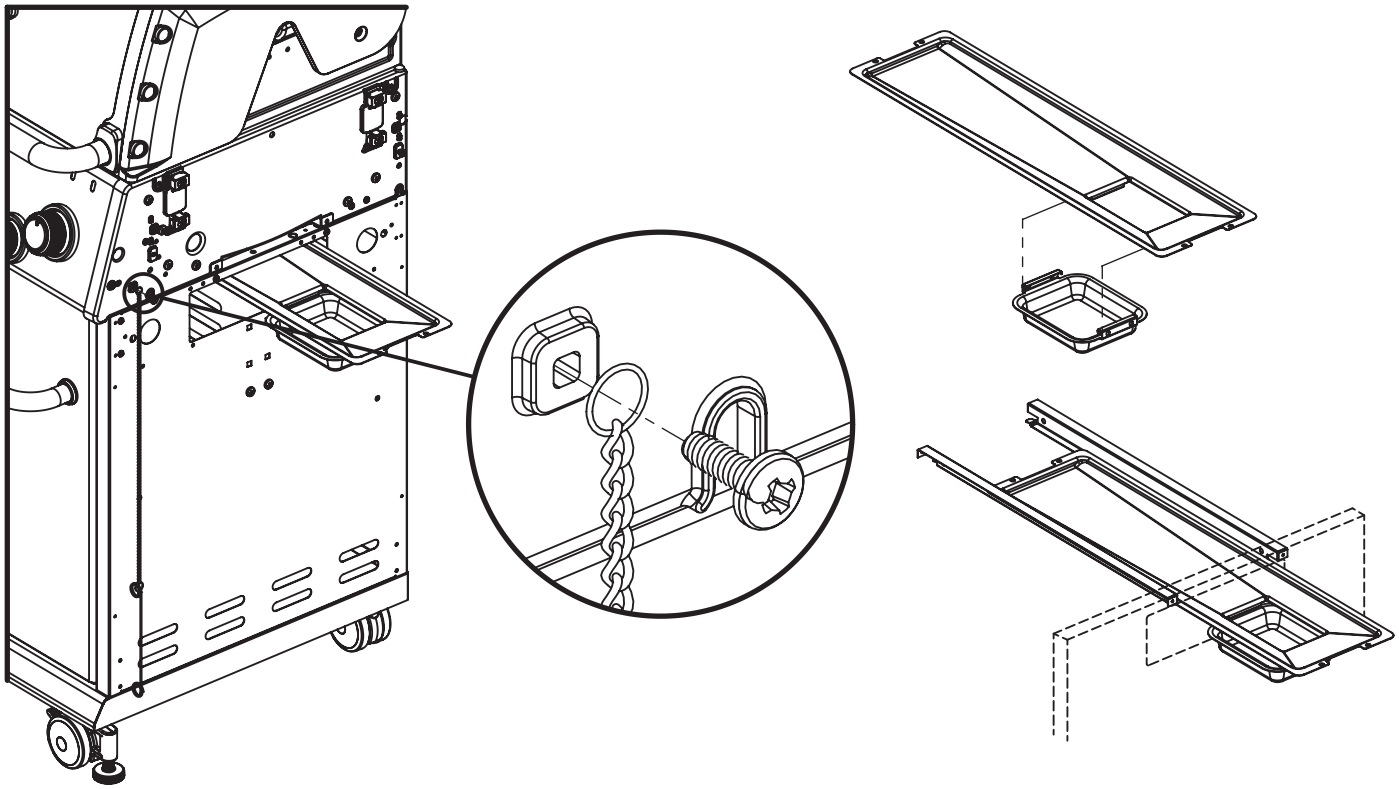

25	

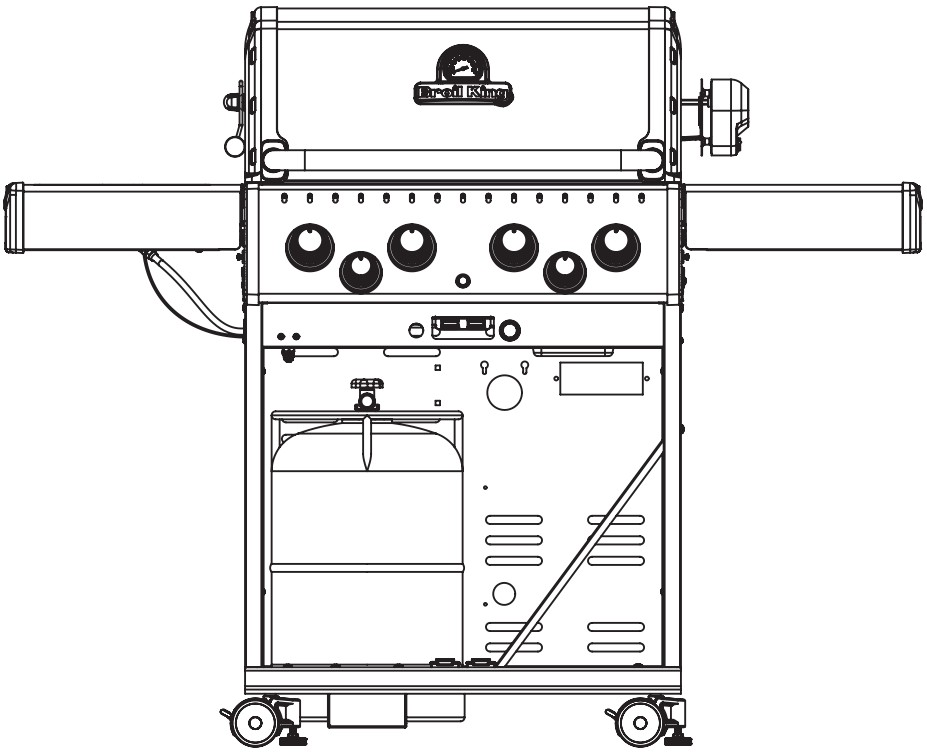

26	(2) (2) 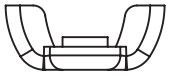

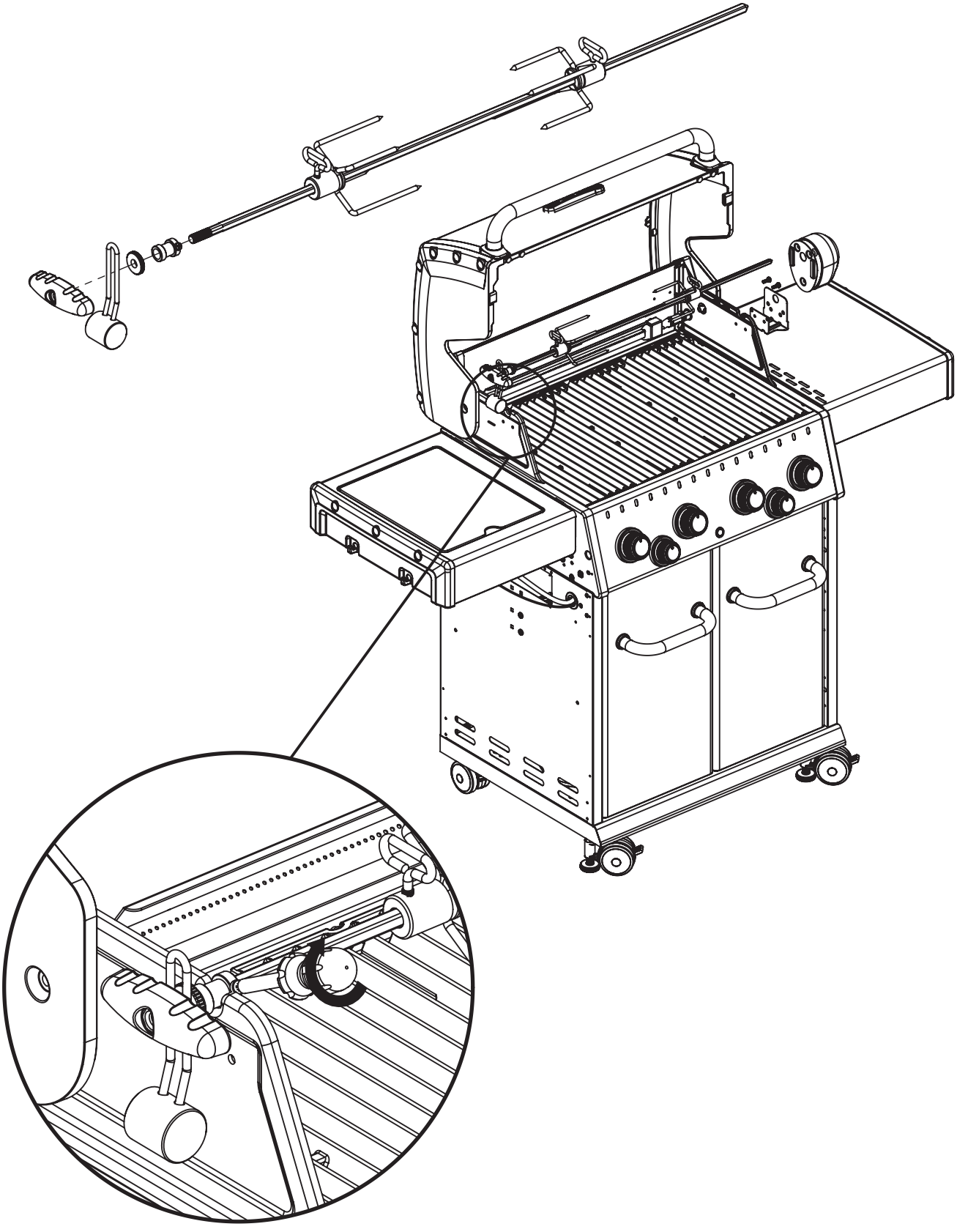

KEY #	ITEM #	DESCRIPTION	9229-52	9229-53	9229-53NZ	9229-56	9229-62	9229-63	9229-63NZ	9229-66	9229-82	9229-83	9229-86	9225-52	9225-53	9225-56	9225-62	9225-63	9225-66	9225-82	9225-83	9229-86
1	66005-304	LID	-	-	-	-	-	-	-	-	-	-	-	1	1	1	1	1	1	1	1	1
	66005-301		1	1	1	1	1	1	1	1	1	1	1	-	-	-	-	-	-	-	-	-
5	10081-BK630	NAMEPLATE	1	1	1	1	1	1	1	1	1	1	1	1	1	1	1	1	1	1	1	1
6	10571-6	HEAT INDICATOR	1	1	1	1	1	1	1	1	1	1	1	1	1	1	1	1	1	1	1	1
7	24005-12A	HANDLE	1	1	1	1	1	1	1	1	1	1	1	1	1	1	1	1	1	1	1	1
8	54009-936	HANDLE BEZEL	2	2	2	2	2	2	2	2	2	2	2	2	2	2	2	2	2	2	2	2
10	52105-074	FIREBOX	1	1	1	1	1	1	1	1	1	1	1	1	1	1	1	1	1	1	1	1
13	53139-988	SHELF BRACKET	4	4	4	4	4	4	4	4	4	4	4	4	4	4	4	4	4	4	4	4
15	22225-014A	COLLECTOR BOX	1	1	1	1	1	1	1	1	1	1	1	1	1	1	1	1	1	1	1	1
17	27249-904	GREASE SHEILD	4	4	4	4	4	4	4	4	4	4	4	4	4	4	4	4	4	4	4	4
25	52909-104D	BURNER - MAIN	4	-	-	-	4	-	-	-	4	-	-	4	-	-	4	-	-	4	-	-
	52909-104E		-	4	4	-	-	4	4	-	-	4	-	-	4	-	-	4	-	-	4	-
	52909-104NGE		-	-	-	4	-	-	-	4	-	-	4	-	-	4	-	-	4	-	-	4
28	52025-304BAR	CONTROL COVER	-	-	-	-	-	-	-	-	1	1	1	-	-	-	-	-	-	1	1	1
	52025-244BAR		-	-	-	-	1	1	1	1	-	-	-	-	-	-	1	1	1	-	-	-
	52025-124BAR		1	1	1	1	-	-	-	-	-	-	-	1	1	1	-	-	-	-	-	-
29	59005-072	CONTROL ASSEMBLY	-	-	-	-	-	-	-	-	1	-	-	-	-	-	-	-	-	1	-	-
	59005-075		-	-	-	-	-	-	-	-	-	1	-	-	-	-	-	-	-	-	1	-
	59005-076		-	-	-	-	-	-	-	-	-	-	1	-	-	-	-	-	-	-	-	1
	59005-032		-	-	-	-	1	-	-	-	-	-	-	-	-	-	1	-	-	-	-	-
	59005-035		-	-	-	-	-	1	-	-	-	-	-	-	-	-	-	1	-	-	-	-
	59005-036		-	-	-	-	-	-	-	1	-	-	-	-	-	-	-	-	1	-	-	-
	59005-034		-	-	-	-	-	-	1	-	-	-	-	-	-	-	-	-	-	-	-	-
	59005-012		1	-	-	-	-	-	-	-	-	-	-	1	-	-	-	-	-	-	-	-
	59005-015		-	1	-	-	-	-	-	-	-	-	-	-	1	-	-	-	-	-	-	-
	59005-016		-	-	-	1	-	-	-	-	-	-	-	-	-	1	-	-	-	-	-	-
	59005-014		-	-	1	-	-	-	-	-	-	-	-	-	-	-	-	-	-	-	-	-
30	S13473-073	HOSE - SIDE BURNER	-	-	-	-	1	-	-	-	1	-	-	-	-	-	1	-	-	1	-	-
	S13473-079		-	-	-	-	-	1	1	-	-	1	-	-	-	-	-	1	-	-	1	-
	S13473-118		-	-	-	-	-	-	-	1	-	-	1	-	-	-	-	-	1	-	-	1
32	10111-15A	HOSE	1	1	1	1	1	1	1	1	1	1	1	1	1	1	1	1	1	1	1	1
33	27905-354E	BURNER - ROTISSERIE	-	-	-	-	-	-	-	-	1	1	1	-	-	-	-	-	-	1	1	1
34	S15508A	ELECTRODE	-	-	-	-	-	-	-	-	1	1	1	-	-	-	-	-	-	1	1	1
35	50809-957	MANIFOLD - REAR BURNER	-	-	-	-	-	-	-	-	1	1	1	-	-	-	-	-	-	1	1	1
36	Y-11990	NUT HEX	-	-	-	-	-	-	-	-	1	1	1	-	-	-	-	-	-	1	1	1
38	22002-264	CONTROL BEZEL	4	4	4	4	4	4	4	4	4	4	4	4	4	4	4	4	4	4	4	4
39	22001-164	CONTROL BEZEL	-	-	-	-	1	1	1	1	2	2	2	-	-	-	1	1	1	2	2	2
40	22001-768	CONTROL KNOB	4	4	4	4	4	4	4	4	4	4	4	4	4	4	4	4	4	4	4	4
41	22001-668	CONTROL KNOB	-	-	-	-	1	1	1	1	2	2	2	-	-	-	1	1	1	2	2	2
42a	10342-44	ELECTRONIC IGNITOR	-	-	-	-	-	-	-	-	1	1	1	-	-	-	-	-	-	1	1	1
	10342-43		-	-	-	-	1	1	1	1	-	-	-	-	-	-	1	1	1	-	-	-
	10342-42		1	1	1	1	-	-	-	-	-	-	-	1	1	1	-	-	-	-	-	-
42b	25070-93	IGNITION BUTTON	1	1	1	1	1	1	1	1	1	1	1	1	1	1	1	1	1	1	1	1
42c	25070-92	IGNITION HARNESS	1	1	1	1	1	1	1	1	1	1	1	1	1	1	1	1	1	1	1	1
43	10342-E13	ELECTRODE	2	2	2	2	2	2	2	2	2	2	2	2	2	2	2	2	2	2	2	2
44	52209-404	FLAV-R-WAVE ®	4	4	4	4	4	4	4	4	4	4	4	4	4	4	4	4	4	4	4	4
45a	52005-281	GRID	4	4	4	4	4	4	4	4	4	4	4	4	4	4	4	4	4	4	4	4
45b	52006-281	GRID	-	-	-	-	-	-	-	-	-	-	-	-	-	-	-	-	-	-	-	-
46	52005-991	GRID - WARMING RACK	1	1	1	1	1	1	1	1	1	1	1	1	1	1	1	1	1	1	1	1
47	27055-901	GREASE TRAY	1	1	1	1	1	1	1	1	1	1	1	1	1	1	1	1	1	1	1	1
48	52009-901	GREASE PAN	1	1	1	1	1	1	1	1	1	1	1	1	1	1	1	1	1	1	1	1
49	21035-991	GREASE TRAY - RAIL	2	2	2	2	2	2	2	2	2	2	2	2	2	2	2	2	2	2	2	2
50	51275-134A	DOOR - LEFT HAND	-	-	-	-	-	-	-	-	-	-	-	1	1	1	1	1	1	1	1	1
	51275-131A		1	1	1	1	1	1	1	1	1	1	1	-	-	-	-	-	-	-	-	-
51	51275-114A	DOOR - RIGHT HAND	-	-	-	-	-	-	-	-	-	-	-	1	1	1	1	1	1	1	1	1
	51275-111A		1	1	1	1	1	1	1	1	1	1	1	-	-	-	-	-	-	-	-	-
55	21071-13	DOOR HANDLE	2	2	2	2	2	2	2	2	2	2	2	2	2	2	2	2	2	2	2	2
56	21070-13	HANDLE BEZEL	4	4	4	4	4	4	4	4	4	4	4	4	4	4	4	4	4	4	4	4
60	21109-905	CABINET - SIDE PANEL	2	2	2	2	2	2	2	2	2	2	2	2	2	2	2	2	2	2	2	2

KEY #	ITEM #	DESCRIPTION	9229-52	9229-53	9229-53NZ	9229-56	9229-62	9229-63	9229-63NZ	9229-66	9229-82	9229-83	9229-86	9225-52	9225-53	9225-56	9225-62	9225-63	9225-66	9225-82	9225-83	9229-86
61	21305-925	CABINET - REAR PANEL	1	1	1	1	1	1	1	1	1	1	1	1	1	1	1	1	1	1	1	1
65	51615-235	CABINET - LOWER BASE	1	1	1	1	1	1	1	1	1	1	1	1	1	1	1	1	1	1	1	1
66	21039-301	TANK BRACKET	1	1	1	1	1	1	1	1	1	1	1	1	1	1	1	1	1	1	1	1
67	51335-211	MAGNET BRACKET	1	1	1	1	1	1	1	1	1	1	1	1	1	1	1	1	1	1	1	1
68	57139-13	CONNECTION BRACKET	4	4	4	4	4	4	4	4	4	4	4	4	4	4	4	4	4	4	4	4
73	51639-908	CASTER BRACKET	4	4	4	4	4	4	4	4	4	4	4	4	4	4	4	4	4	4	4	4
74	10892-286	CASTER	2	2	2	2	2	2	2	2	2	2	2	2	2	2	2	2	2	2	2	2
75	10892-287	CASTER – LEVELING	2	2	2	2	2	2	2	2	2	2	2	2	2	2	2	2	2	2	2	2
77	51239-901	TANK PREVENTION BRACKET	1	1	1	1	1	1	1	1	1	1	1	1	1	1	1	1	1	1	1	1
80	53150-614	SIDE SHELF	2	2	2	2	1	1	1	1	1	1	1	2	2	2	1	1	1	1	1	1
82	53150-654	SIDE SHELF - SIDE BURNER	▪	▪	▪	▪	1	1	1	1	1	1	1	▪	▪	▪	1	1	1	1	1	1
86	10390-E10D	SIDE BURNER	▪	▪	▪	▪	1	▪	▪	▪	1	▪	▪	▪	▪	▪	1	▪	▪	1	▪	▪
	10390-E10E		▪	▪	▪	▪	▪	1	1	▪	▪	1	▪	▪	▪	▪	▪	1	▪	▪	1	▪
	10390-E10EN		▪	▪	▪	▪	▪	▪	▪	1	▪	▪	1	▪	▪	▪	▪	▪	1	▪	▪	1
87	23004-271	SIDE BURNER - BODY	▪	▪	▪	▪	1	1	1	1	1	1	1	▪	▪	▪	1	1	1	1	1	1
88	23000-254	SIDE BURNER - COVER	▪	▪	▪	▪	1	1	1	1	1	1	1	▪	▪	▪	1	1	1	1	1	1
89	53140-981	SIDE BURNER GRID	▪	▪	▪	▪	1	1	1	1	1	1	1	▪	▪	▪	1	1	1	1	1	1
92	10342-T21	SIDE BURNER ELECTRODE	▪	▪	▪	▪	1	1	1	1	1	1	1	▪	▪	▪	1	1	1	1	1	1
100	Y-12220	GROMMET	▪	▪	▪	▪	1	1	1	1	1	1	1	▪	▪	▪	1	1	1	1	1	1
105	S21362	SPRING	▪	▪	▪	▪	▪	▪	▪	▪	1	1	1	▪	▪	▪	▪	▪	▪	1	1	1
108	10693-099	REAR BURNER ORIFICE	▪	▪	▪	▪	▪	▪	▪	▪	1	▪	▪	▪	▪	▪	▪	▪	▪	1	▪	▪
	10693-104		▪	▪	▪	▪	▪	▪	▪	▪	▪	1	▪	▪	▪	▪	▪	▪	▪	▪	1	▪
	10693-161		▪	▪	▪	▪	▪	▪	▪	▪	▪	▪	1	▪	▪	▪	▪	▪	▪	▪	▪	1
110	S15271	HANDLE	▪	▪	▪	▪	▪	▪	▪	▪	1	1	1	▪	▪	▪	▪	▪	▪	1	1	1
111	S15270	BALANCE	▪	▪	▪	▪	▪	▪	▪	▪	1	1	1	▪	▪	▪	▪	▪	▪	1	1	1
112	S15299	WASHER	▪	▪	▪	▪	▪	▪	▪	▪	1	1	1	▪	▪	▪	▪	▪	▪	1	1	1
113	S15263	BUSHING	▪	▪	▪	▪	▪	▪	▪	▪	1	1	1	▪	▪	▪	▪	▪	▪	1	1	1
114	S15259	ROTISSERIE ROD	▪	▪	▪	▪	▪	▪	▪	▪	1	1	1	▪	▪	▪	▪	▪	▪	1	1	1
115	S15287	4 PRONG FORK	▪	▪	▪	▪	▪	▪	▪	▪	2	2	2	▪	▪	▪	▪	▪	▪	2	2	2
116	57039-901	ROTISSERIE BRACKET	▪	▪	▪	▪	▪	▪	▪	▪	1	1	1	▪	▪	▪	▪	▪	▪	1	1	1
125	Y-12835	SCREW - #6 X 1/4	▪	▪	▪	▪	2	2	2	2	2	2	2	▪	▪	▪	2	2	2	2	2	2
127	S21125	SCREW - #8 X 3/8	8	8	8	8	8	8	8	8	8	8	8	8	8	8	8	8	8	8	8	8
128	S21124	SCREW - #8 X 1/2	8	8	8	8	8	8	8	8	8	8	8	8	8	8	8	8	8	8	8	8
130	Y-12641	SCREW – SHLDR #8 X 1/2	▪	▪	▪	▪	2	2	2	2	2	2	2	▪	▪	▪	2	2	2	2	2	2
131	S21136	SCREW - #8-32 X 1/2	8	8	8	8	10	10	10	10	12	12	12	8	8	8	10	10	10	12	12	12
134	Y-29304	SCREW - #10-24 X 3/8	2	2	2	2	2	2	2	2	2	2	2	2	2	2	2	2	2	2	2	2
135	S35094	SCREW - #10-24 X 5/8	1	1	1	1	1	1	1	1	1	1	1	1	1	1	1	1	1	1	1	1
137	S35095	SCREW - #10-24 X 5/8	▪	▪	▪	▪	▪	▪	▪	▪	2	2	2	▪	▪	▪	▪	▪	▪	2	2	2
140	Y-12865	SCREW - 1/4-20 X 1/2	22	22	22	22	22	22	22	22	22	22	22	22	22	22	22	22	22	22	22	22
141	Y-12865	SCREW - 1/4-20 X 3/4	2	2	2	2	2	2	2	2	2	2	2	2	2	2	2	2	2	2	2	2
142	Y-12860	SCREW - 1/4-20 X 1	2	2	2	2	2	2	2	2	2	2	2	2	2	2	2	2	2	2	2	2
143	Y-11559	SCREW - 1/4-20 X 1	8	8	8	8	8	8	8	8	8	8	8	8	8	8	8	8	8	8	8	8
151	Y-11793	NUT – 1/4-20	4	4	4	4	4	4	4	4	4	4	4	4	4	4	4	4	4	4	4	4
154	S21061	WING NUT #10	▪	▪	▪	▪	▪	▪	▪	▪	2	2	2	▪	▪	▪	▪	▪	▪	2	2	2
160	Y-12857	WASHER	4	4	4	4	4	4	4	4	4	4	4	4	4	4	4	4	4	4	4	4
169	Y-11230	RETAINER CLIP	▪	▪	▪	▪	1	1	1	1	1	1	1	▪	▪	▪	1	1	1	1	1	1
170	S21235	HINGE PIN	2	2	2	2	2	2	2	2	2	2	2	2	2	2	2	2	2	2	2	2
171	S21233	CLIP	2	2	2	2	2	2	2	2	2	2	2	2	2	2	2	2	2	2	2	2
173	10240-20	DOOR HINGE PIN - TOP	2	2	2	2	2	2	2	2	2	2	2	2	2	2	2	2	2	2	2	2
174	Y-12124	DOOR HINGE COVER	2	2	2	2	2	2	2	2	2	2	2	2	2	2	2	2	2	2	2	2
175	Y-11551	DOOR SCREW	2	2	2	2	2	2	2	2	2	2	2	2	2	2	2	2	2	2	2	2
177	Y-12222	MAGNET	2	2	2	2	2	2	2	2	2	2	2	2	2	2	2	2	2	2	2	2
178	Y-12223	MAGNET - SNAP IN	2	2	2	2	2	2	2	2	2	2	2	2	2	2	2	2	2	2	2	2
180	SP25-11	LID BUMPER	2	2	2	2	2	2	2	2	2	2	2	2	2	2	2	2	2	2	2	2
181	Y-11231	LID BUMPER - ROUND	2	2	2	2	2	2	2	2	2	2	2	2	2	2	2	2	2	2	2	2
182	20005-000	MATCH LIGHT CHAIN	1	1	1	1	1	1	1	1	1	1	1	1	1	1	1	1	1	1	1	1
186	Y-11544	BURNER SCREW	4	4	4	4	4	4	4	4	4	4	4	4	4	4	4	4	4	4	4	4
187	S21242	CLIP	4	4	4	4	4	4	4	4	4	4	4	4	4	4	4	4	4	4	4	4

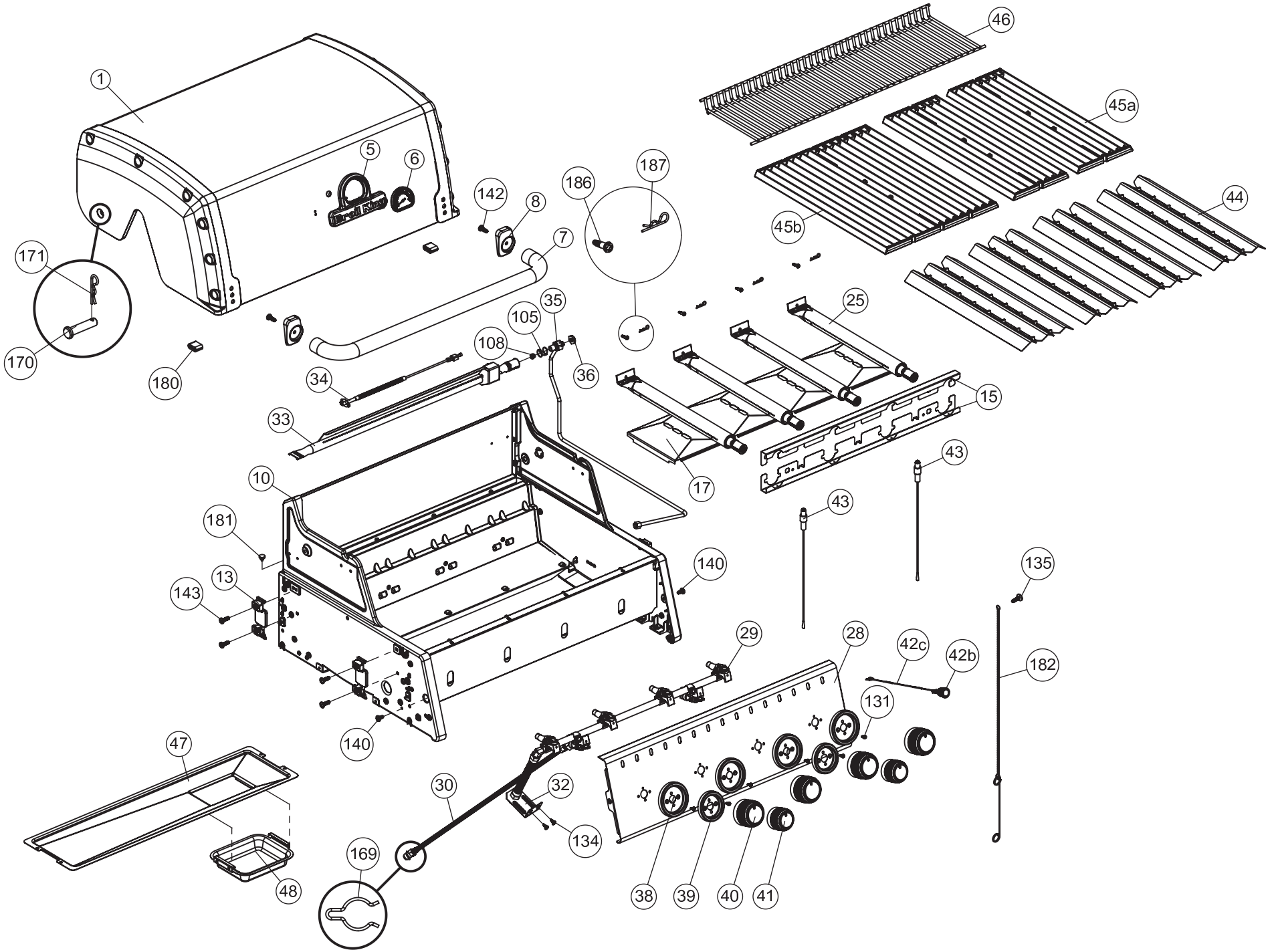
1
5
6
142
8
7
186
187
171
170
180
35
105
108
36
34
33
10
181
13
143
140
140
47
48
169
30
32
134
46
45a
45b
44
25
15
17
43
43
135
29
28
42c
42b
182
131
38
39
40
41

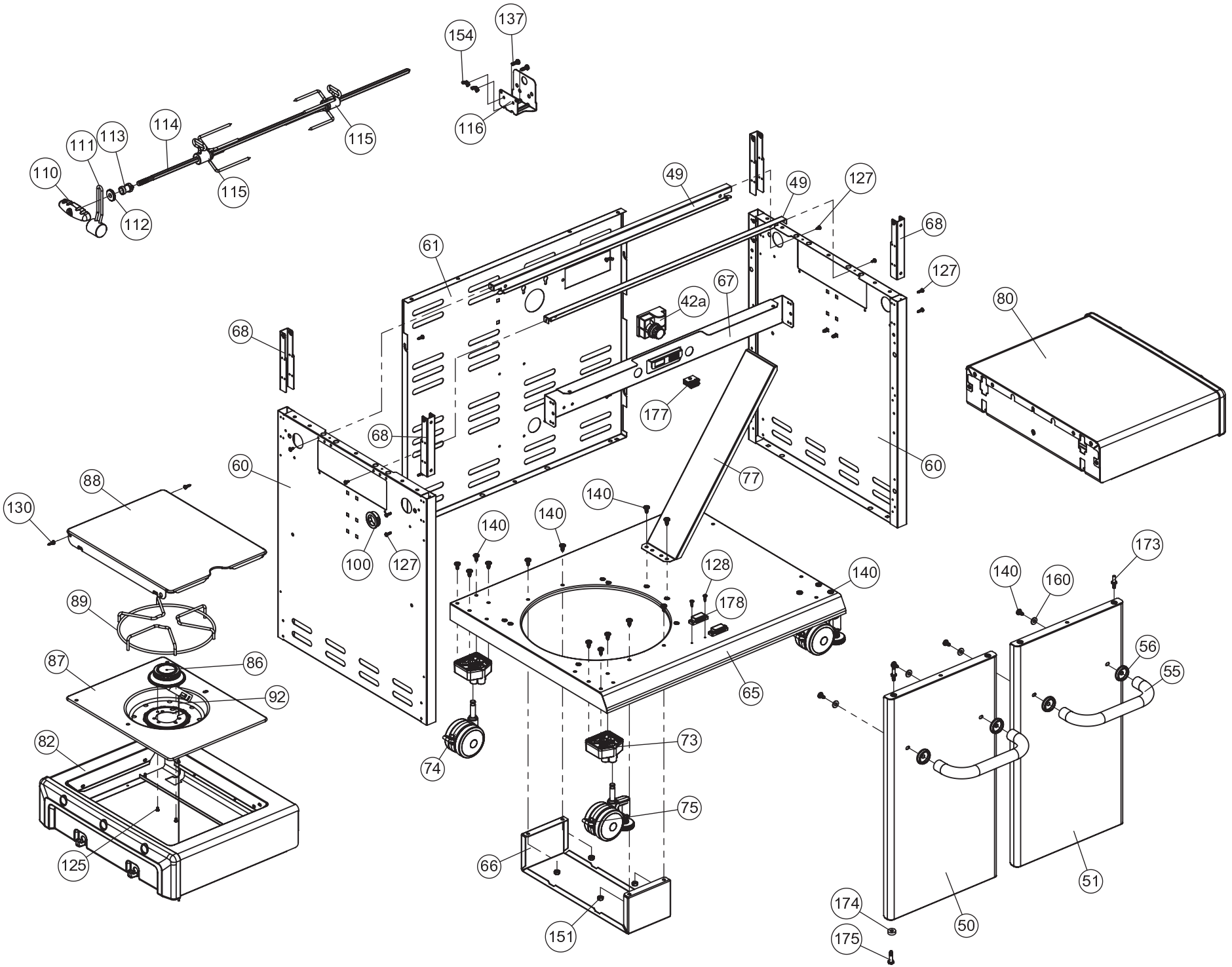

154
137
116
114
113
111
110
115
115
112
49
49
127
68
61
127
67
42a
80
68
177
68
60
60
77
88
130
140
140
140
100
127
128
140
178
173
140
160
89
56
55
87
86
92
65
82
73
74
75
125
66
51
174
50
151
175